Low Profile Slider Type

LEM Series

∗ For details, refer to page 1343 and onward.

RoHS

Size: **25, 32**

Incremental (Step Motor 24 VDC)

Compact Low Profile

Table height reduced by using belt drive and offset guide. Mounting interchangeable with the E-MY series

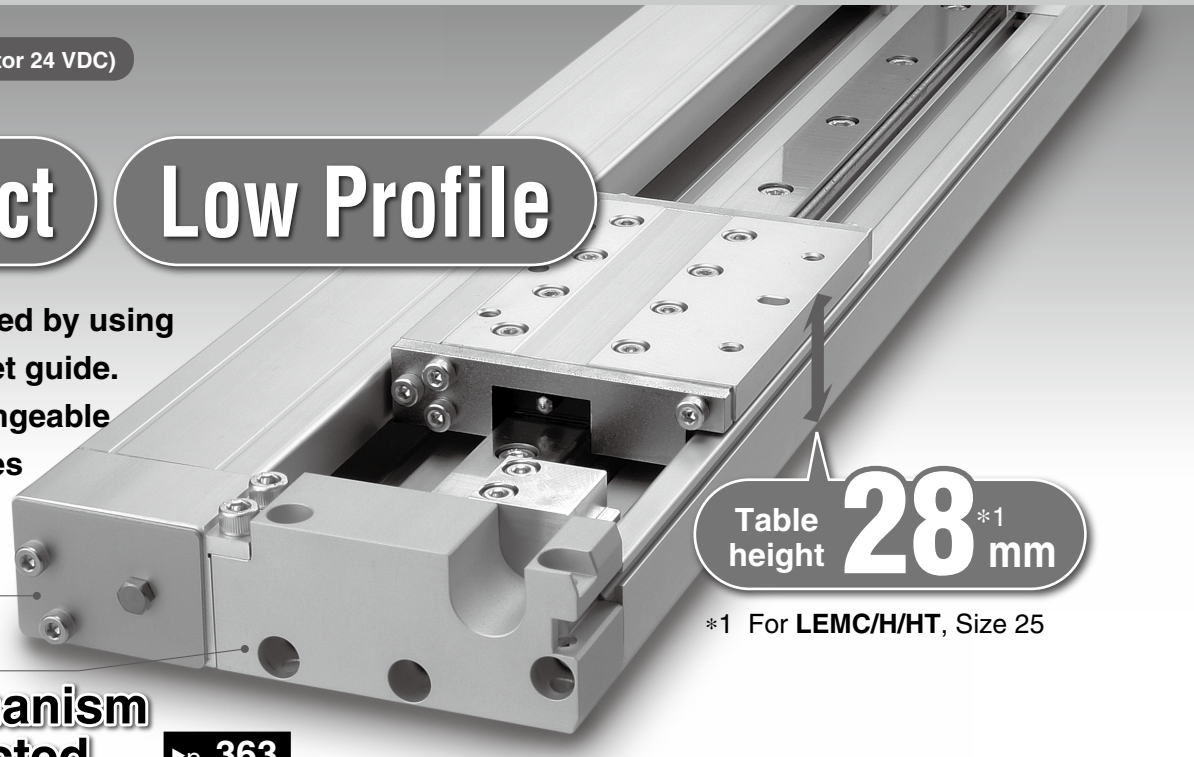

Table height **28** ∗1 mm

∗1 For **LEMC/H/HT**, Size 25

Guide mechanism can be selected.

▸p. 363

Basic type

LEMB Series

- Light load transfer
- Combining with external guide
- Long stroke

Size	Work load [kg]
25	6
32	11

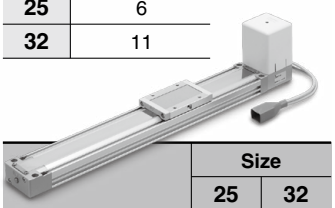

	Size	
	25	32
Stroke [mm]	2000	2000
Table height [mm]	40	40
Speed [mm/s]	1000	1000

Cam follower guide type

LEMC Series

- Workpiece direct mounting
- Long stroke

Size	Work load [kg]
25	10
32	20

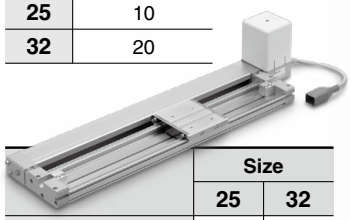

	Size	
	25	32
Stroke [mm]	2000	2000
Table height [mm]	28	37
Speed [mm/s]	1000	1000

Linear guide single axis type

LEMH Series

- Workpiece direct mounting
- Provides more moment resistance than the cam follower guide type
- High-speed transfer

Size	Work load [kg]
25	10
32	20

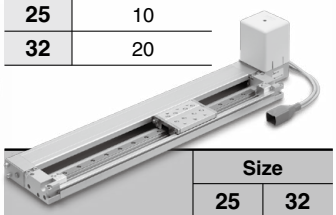

	Size	
	25	32
Stroke [mm]	1000	1500
Table height [mm]	28	37
Speed [mm/s]	2000	2000

Linear guide double axis type

LEMHT Series

- Workpiece direct mounting
- Provides more moment resistance than the linear guide single axis type
- High-speed transfer

Size	Work load [kg]
25	10
32	20

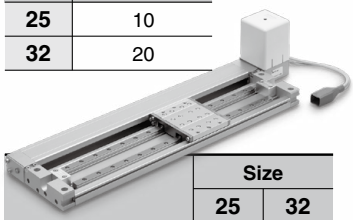

	Size	
	25	32
Stroke [mm]	1000	1500
Table height [mm]	28	37
Speed [mm/s]	2000	2000

Selectable controllability (Controller)

- End to end operation similar to an air cylinder (12 intermediate stop positions)
- Easy position setting using numerical inputs

Incremental (Step Motor 24 VDC)

▶Programless type
(With stroke study)
LECP2 Series

- **End to end operation similar to an air cylinder**
- 2 stroke end points + 12 intermediate positioning points
- Control panel setting
- Wire-saving design

Specialized for LEM Series

▸p. 994

▶Programless type
LECP1 Series

- 14 positioning points
- Control panel setting

▶Step data input type
JXC51/61 Series

- 64 positioning points

▶EtherCAT/EtherNet/IP™/PROFINET/DeviceNet®/IO-Link/CC-Link direct input type
JXCE□/91/P1/D1/L□/M1 Series

• Mounting interchangeable with the previous E-MY series

LEM series	
LEM□25	
LEM□32	

E-MY series	
E-MY□16	
E-MY□25	

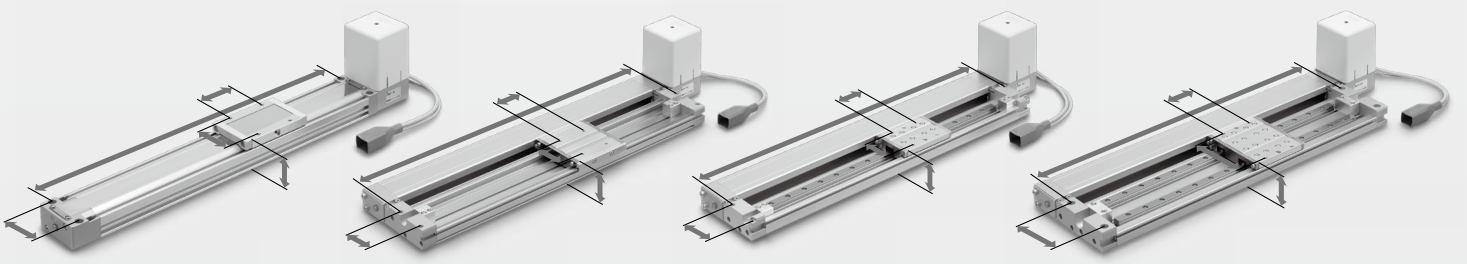

Basic type/ LEMB | Cam follower guide type/ LEMC | Linear guide single axis type/ LEMH | Linear guide double axis type/ LEMHT

• Can be connected to various types of guide (*LEMB Series*)

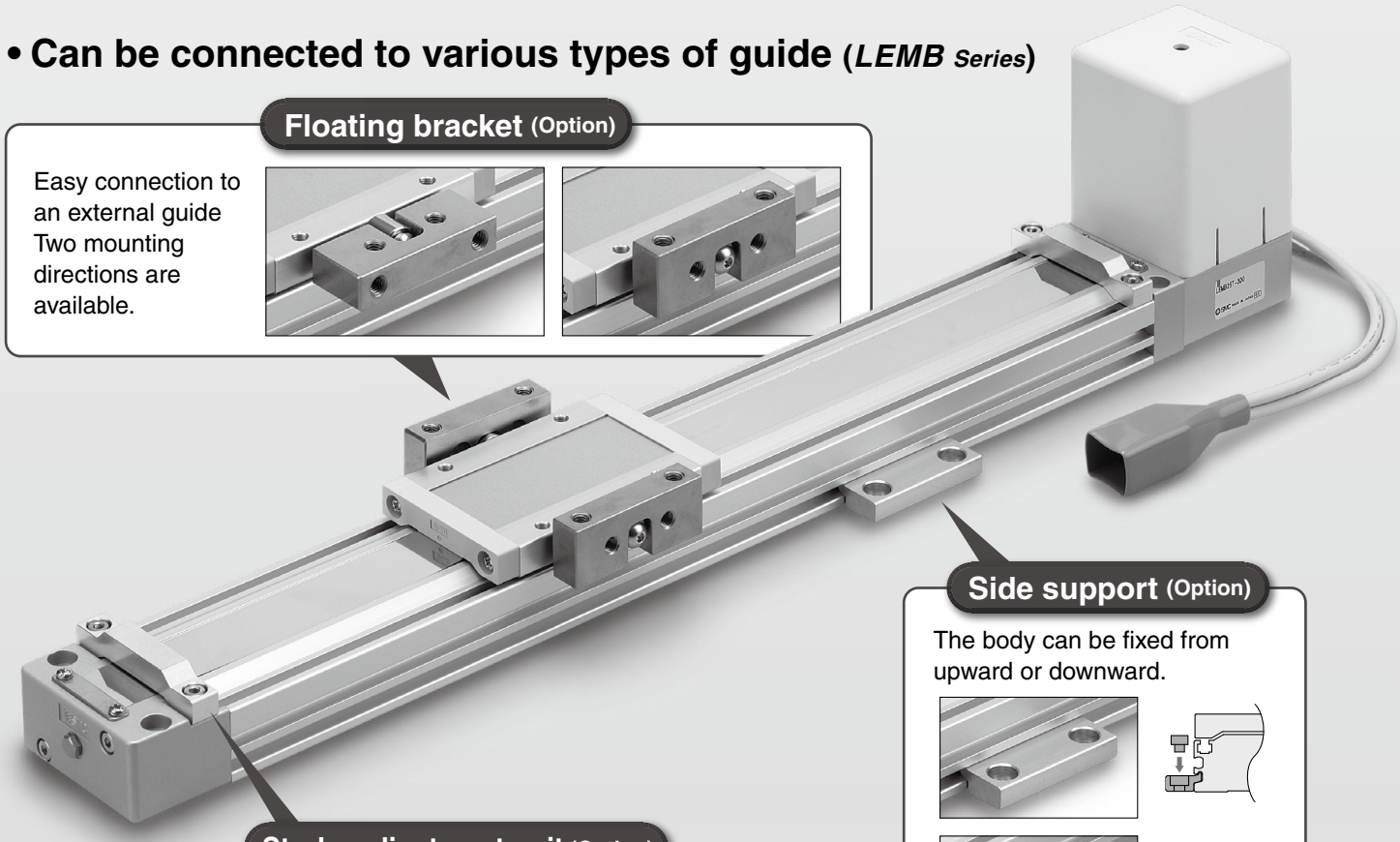

Floating bracket (Option)

Easy connection to an external guide Two mounting directions are available.

Side support (Option)

The body can be fixed from upward or downward.

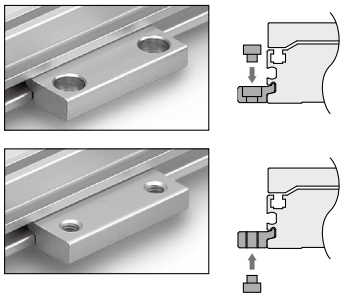

Stroke adjustment unit (Option)

To adjust the stroke end like an air cylinder, use the LECP2 controller and the stroke adjustment unit.

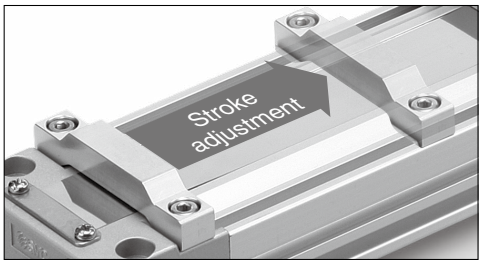

∗ The movable length of the LEM is the stroke + 6 mm of table movement, at the time of shipment.

• Easy maintenance (*LEMC/H/HT Series*)

The drive unit and the guide unit are separable.

Easy attachment/ detachment

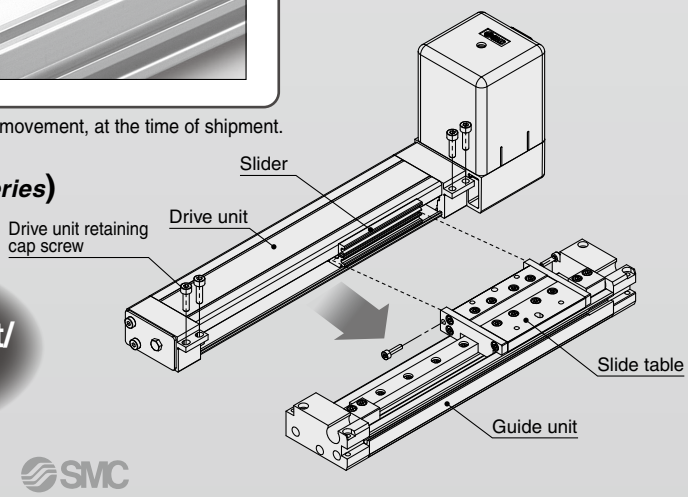

- **Motor placement: Mounting position of the motor is user selectable and can either be on the top, bottom, left, or right of the actuator.**

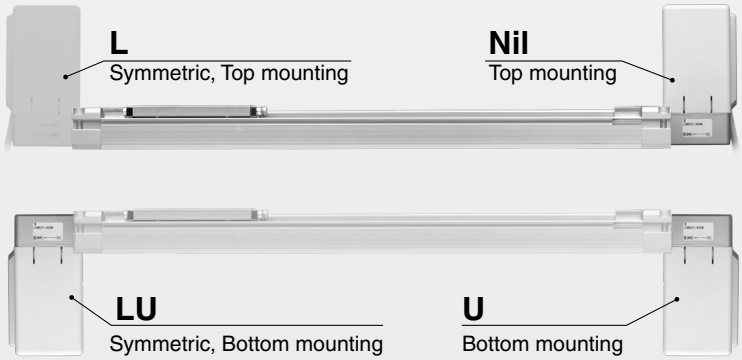

Motor mounting position

Nil	Top mounting
U	Bottom mounting
L*1	Symmetric, Top mounting
LU*1	Symmetric, Bottom mounting

*1 Can be selected only for the LEMC, LEMH, LEMHT

- **Solid state auto switch can be mounted for checking the limit and the intermediate signal.**

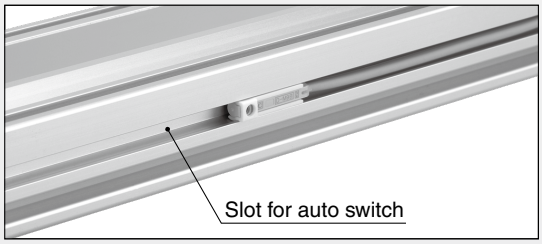

2-color indicator solid state auto switch

Appropriate setting of the mounting position can be performed without mistakes.

A green light lights up at the optimum operating range.

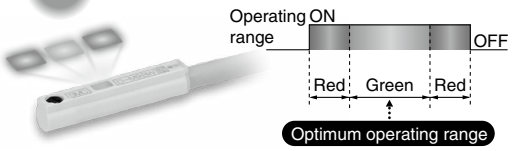

Application Examples

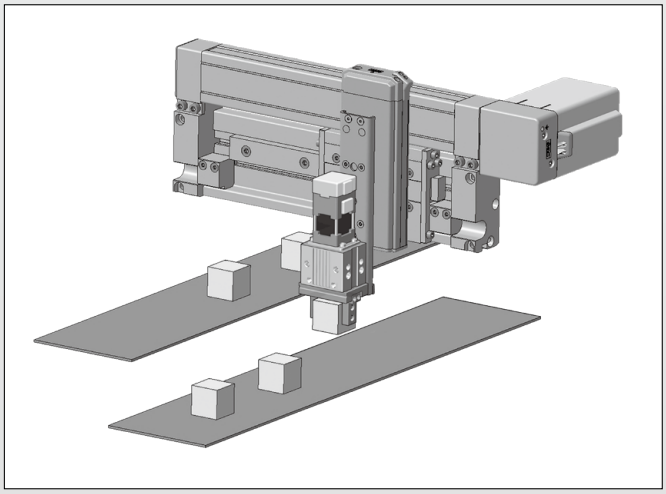

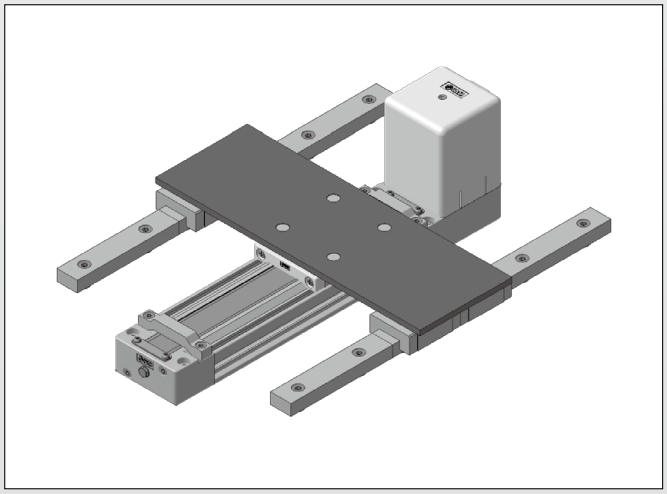

Variations

Belt Drive

* Cannot be used for vertical transfer

Series	Size	Equivalent lead [mm]	Stroke [mm]*1	Work load: Horizontal [kg]	Speed [mm/s]	Page
LEMB Basic type	25	48	50, 100, 150, 200, 250, 300, 350, 400, 450, 500, 550, 600, 700, 800, 900, 1000, (1100), 1200, (1300), (1400), 1500, (1600), (1700), (1800), (1900), 2000	6 (10)*2	1000	363
	32			11 (20)*2	1000	
LEMC Cam follower guide type	25	48	50, 100, 150, 200, 250, 300, 350, 400, 450, 500, 550, 600, 700, 800, 900, 1000, (1100), 1200, (1300), (1400), 1500, (1600), (1700), (1800), (1900), 2000	10	1000	
	32			20	1000	
LEMH Linear guide single axis type	25	48	50, 100, 150, 200, 250, 300, 350, 400, 450, 500, 550, 600, (700), (800), (900), (1000)	10	2000	
	32		50, 100, 150, 200, 250, 300, 350, 400, 450, 500, 550, 600, (700), (800), (900), (1000), (1100), (1200), (1300), (1400), (1500)	20	2000	
LEMHT Linear guide double axis type	25	48	50, 100, 150, 200, 250, 300, 350, 400, 450, 500, 550, 600, (700), (800), (900), (1000)	10	2000	
	32		50, 100, 150, 200, 250, 300, 350, 400, 450, 500, 550, 600, (700), (800), (900), (1000), (1100), (1200), (1300), (1400), (1500)	20	2000	

*1 Strokes shown in ( ) are produced upon receipt of order. Please contact SMC as all non-standard and non-made-to-order strokes are produced as special orders.
*2 ( ): Using an external guide (Provided by the customer).

Incremental (Step Motor 24 VDC)

Low Profile Slider Type: Basic Type *LEMB Series*

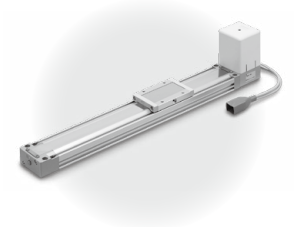

Incremental (Step Motor 24 VDC)

Low Profile Slider Type: Cam Follower Guide Type *LEMC Series*

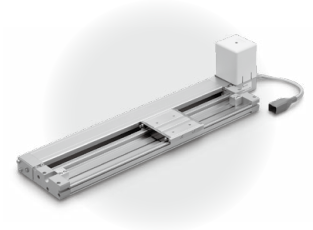

Incremental (Step Motor 24 VDC)

Low Profile Slider Type: Linear Guide Type *LEMH/HT Series*

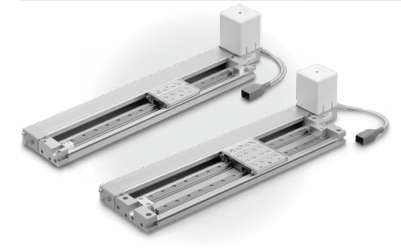

Incremental (Step Motor 24 VDC) Controllers

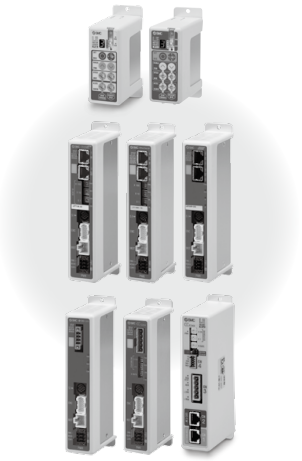

Low Profile Slider Type

Basic Type *LEMB Series*

Incremental (Step Motor 24 VDC)

p. 371

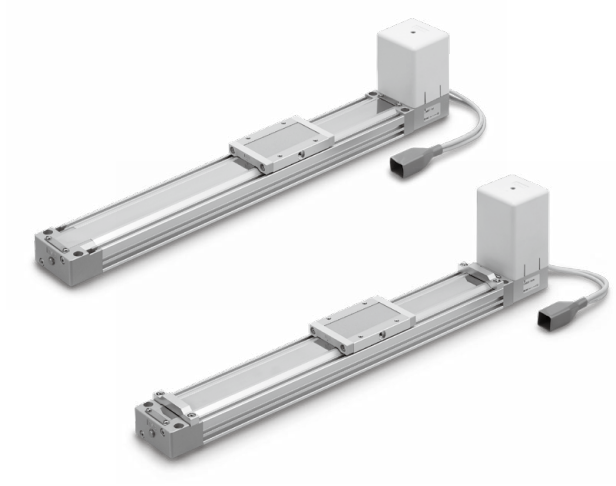

Cam Follower Guide Type *LEMC Series*

Incremental (Step Motor 24 VDC)

p. 381

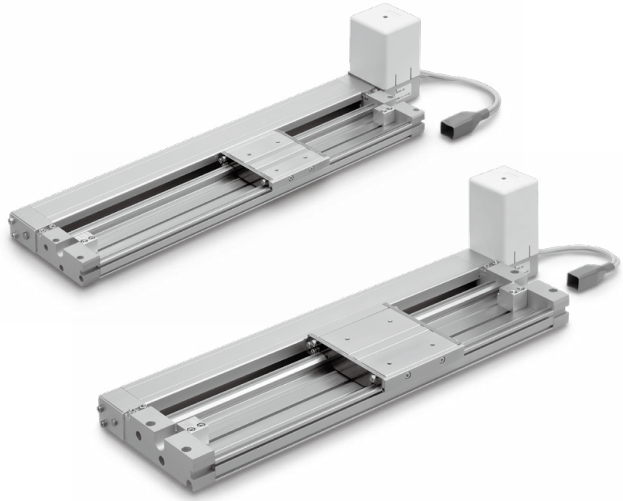

Linear Guide Single Axis Type *LEMH Series*

Incremental (Step Motor 24 VDC)

p. 391

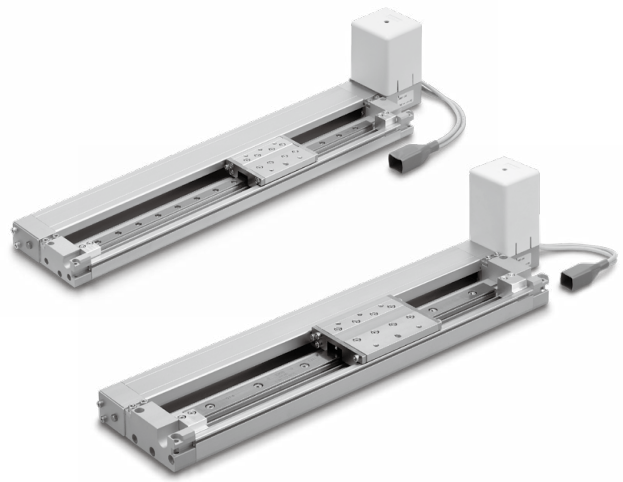

Linear Guide Double Axis Type *LEMHT Series*

Incremental (Step Motor 24 VDC)

p. 391

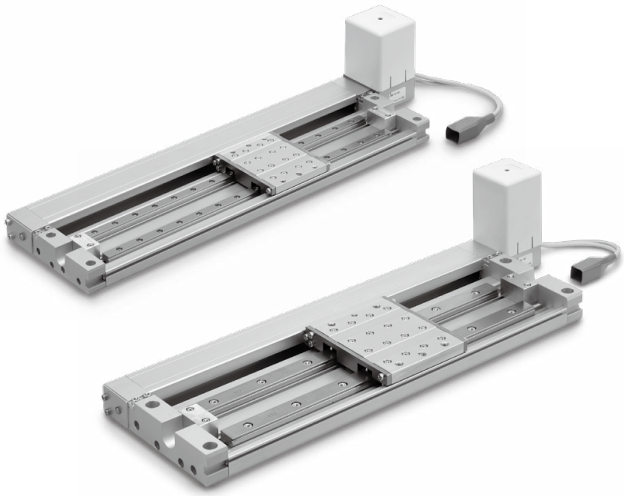

Controllers/Drivers p. 994

Incremental (Step Motor 24 VDC)

Low Profile Slider Type

***LEM* Series**

Model Selection

LEMB Series ▶p. 371 **LEMC Series** ▶p. 381 **LEMH/HT Series** ▶p. 391

Selection Procedure

Step 1 Tentative Selection of Guide Mechanism. Check the speed–work load, work load–acceleration/deceleration. → **Step 2** Check the dynamic allowable moment. → **Step 3** Check the cycle time.

Selection Example

Operating conditions

- Workpiece mass: 10 [kg]
- Speed: 1000 [mm/s]
- Acceleration/Deceleration: 2500 [mm/s^2]
- Stroke: 600 [mm]
- Mounting orientation: Horizontal upward
- Workpiece mounting condition

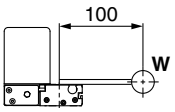

Step 1 Tentative Selection of Guide Mechanism

Series	Type	Guideline for tentative model selection							Note
		Use of external guide	Direct loaded (Horizontal)	Table accuracy*1	Direct mount (Wall mounting)	Moment resistance	Max. stroke [mm]	Max. speed [mm/s]	
LEMB	Basic type	◎	○	△	△	△	2000	1000	● Light load transfer ● Combining with external guide ● Long stroke
LEMC	Cam follower guide type	×	◎	◎	○	○	2000	1000	● Workpiece direct mounting ● Long stroke
LEMH	Linear guide single axis type	×	◎	◎	◎	◎	Size 25: 1000 Size 32: 1500	2000	● Workpiece direct mounting ● Provides more moment resistance than the cam follower guide type ● High-speed transfer
LEMHT	Linear guide double axis type	×	◎	◎	◎	◎	Size 25: 1000 Size 32: 1500	2000	● Workpiece direct mounting ● Provides more moment resistance than the linear guide single axis type ● High-speed transfer

◎: Most suitable ○: Suitable △: Usable ×: Not recommended

***1 The table accuracy means the amount of table deflection when a moment is applied.**

In conditions where a moment is generated, tentatively select the LEMH series.

<Speed–Work Load Graph>

Select a model based on the workpiece mass and speed while referencing the speed–work load graph.

LEMH32

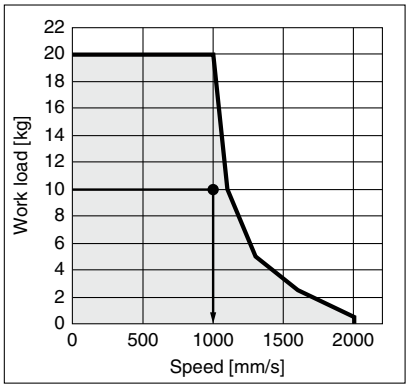

<Work Load–Acceleration/Deceleration Graph>

Check that the set acceleration/deceleration of the work load is within the allowable range while referencing the work load–acceleration/deceleration graph.

LEMH32

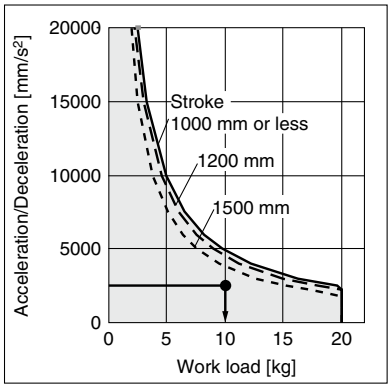

Selection Procedure

Step 2 **Check the allowable moment. <Static allowable moment*1>** (page 366)
<Dynamic allowable moment> (pages 367 to 369)

Confirm the moment that applies to the actuator is within the allowable range for both static*1 and dynamic conditions.

*1 For LEMC/H/HT

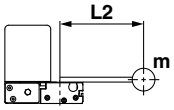

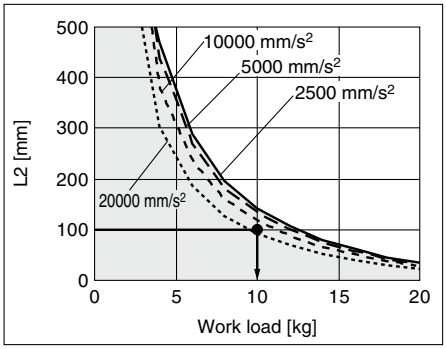

Based on the above calculation result, the LEMH32T-500 should be selected.

Step 3 **Check the cycle time.**

Refer to method 1 for a rough estimate, and method 2 for a more precise value.
Method 1: Check the cycle time graph. (Page 365)
Method 2: Calculation

Calculate **the cycle time** using the following calculation method.

Cycle time:
T can be found from the following equation.

$$T = T1 + T2 + T3 + T4 \text{ [s]}$$

- T1: Acceleration time and T3: Deceleration time can be found by the following equation.

$$T1 = V/a1 \text{ [s]} \qquad T3 = V/a2 \text{ [s]}$$

- T2: Constant speed time can be found from the following equation.

$$T2 = \frac{L - 0.5 \cdot V \cdot (T1 + T3)}{V} \text{ [s]}$$

- T4: Settling time varies depending on the conditions such as motor types, load and, in position of the step data. Therefore, calculate the settling time while referencing the following value.

$$T4 = 0.3 \text{ [s]}$$

Calculation example)
T1 to T4 can be calculated as follows.

$T1 = V/a1 = 1000/2500 = 0.4$ [s],

$T3 = V/a2 = 1000/2500 = 0.4$ [s]

$$T2 = \frac{L - 0.5 \cdot V \cdot (T1 + T3)}{V}$$

$$= \frac{600 - 0.5 \cdot 1000 \cdot (0.4 + 0.4)}{1000}$$

$= 0.2$ [s]

$T4 = 0.3$ [s]

The cycle time can be found as follows.

$T = T1 + T2 + T3 + T4$
$= 0.4 + 0.2 + 0.4 + 0.3$
= 1.3 [s]

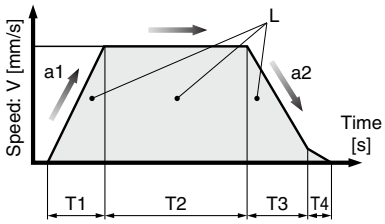

L: Stroke [mm]···(Operating condition)
V: Speed [mm/s]···(Operating condition)
a1: Acceleration [mm/s²]···(Operating condition)
a2: Deceleration [mm/s²]···(Operating condition)

T1: Acceleration time [s]
Time until reaching the set speed
T2: Constant speed time [s]
Time while the actuator is operating at a constant speed
T3: Deceleration time [s]
Time from the beginning of the constant speed operation to stop
T4: Settling time [s]
Time until positioning is completed

Speed–Work Load Graph (Guide)
Step Motor (Servo/24 VDC)

∗ The following graphs show the values when the moving force is 100%.

LEMB25

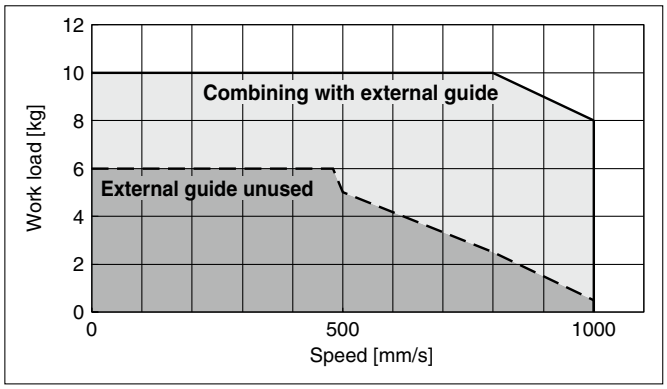

LEMB32

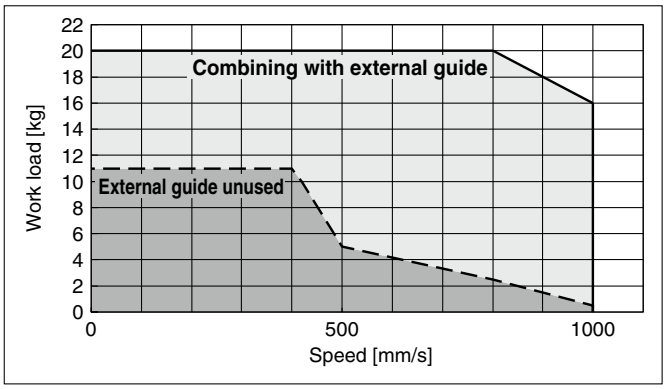

LEMC25

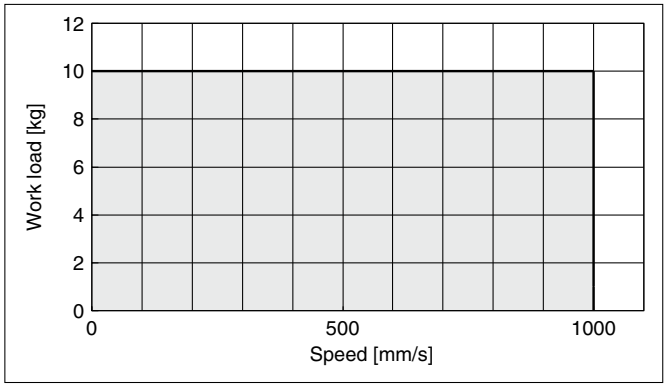

LEMC32

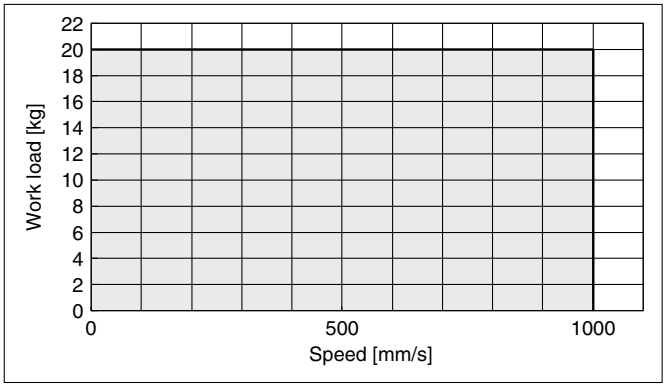

LEMH/HT25

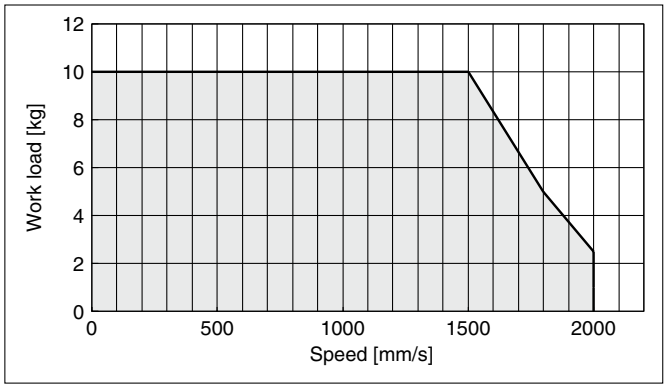

LEMH/HT32

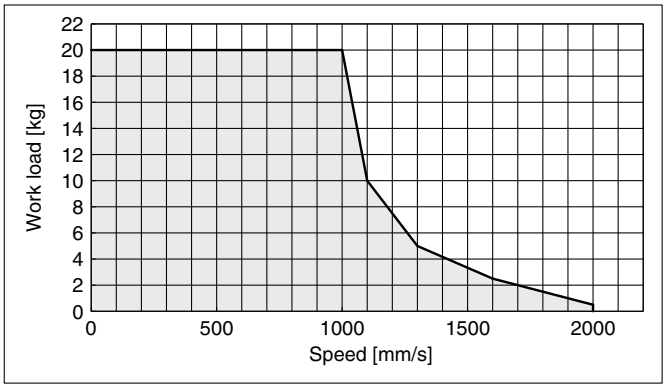

Cycle Time Graph (Guide)

LEMB□/LEMC□ (Speed: 1000 mm/s)

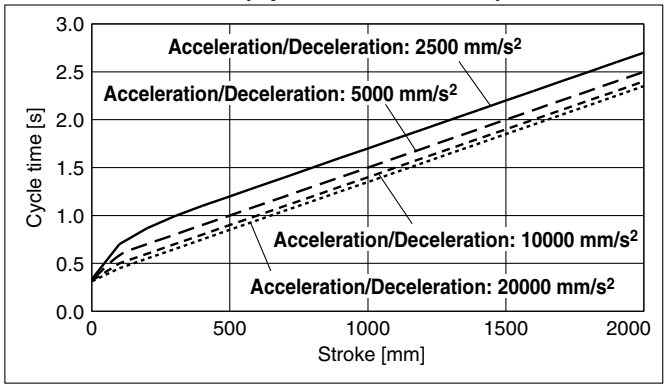

LEMH□/LEMHT□ (Speed: 2000 mm/s)

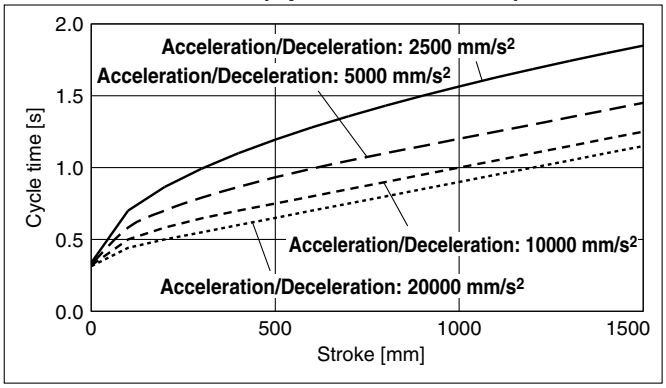

**The following shows the allowable values of set acceleration to the work loads.
Set the acceleration within the allowable range.**

Work Load–Acceleration/Deceleration Graph (Guide)

LEMB25

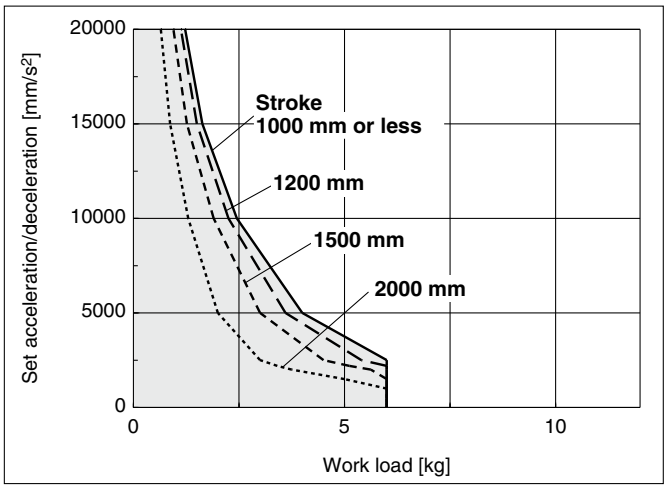

LEMB32

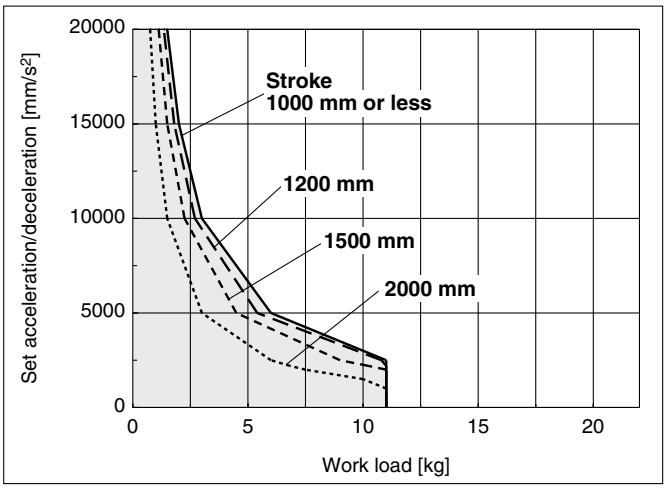

LEMB25 (Combining with external guide)/LEMC25

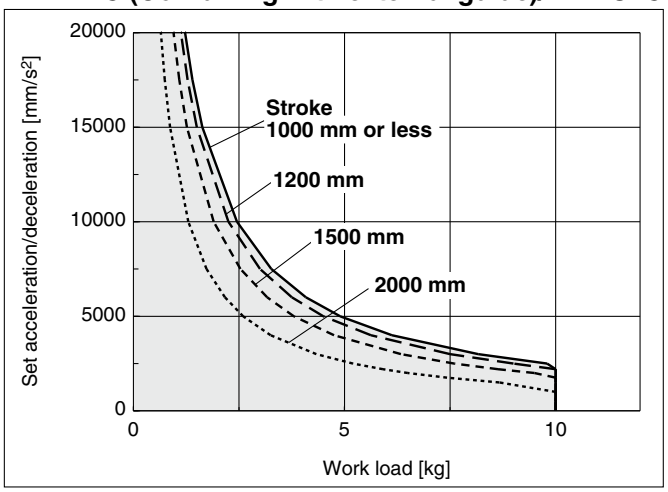

∗ Friction coefficient for combining with external guide is 0.1 or less.

LEMB32 (Combining with external guide)/LEMC32

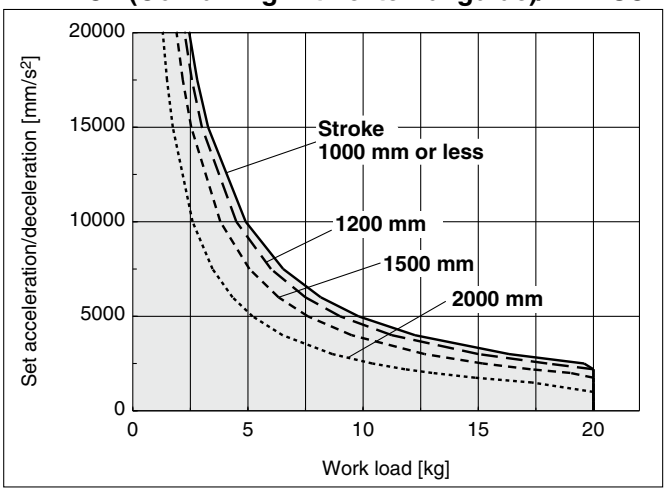

∗ Friction coefficient for combining with external guide is 0.1 or less.

LEMH25/LEMHT25

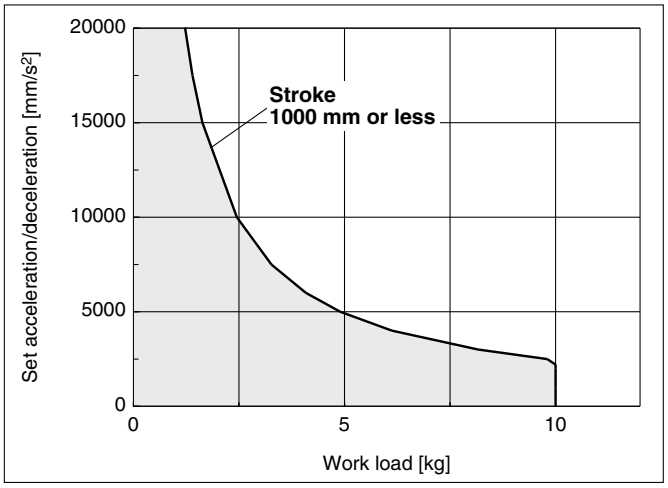

LEMH32/LEMHT32

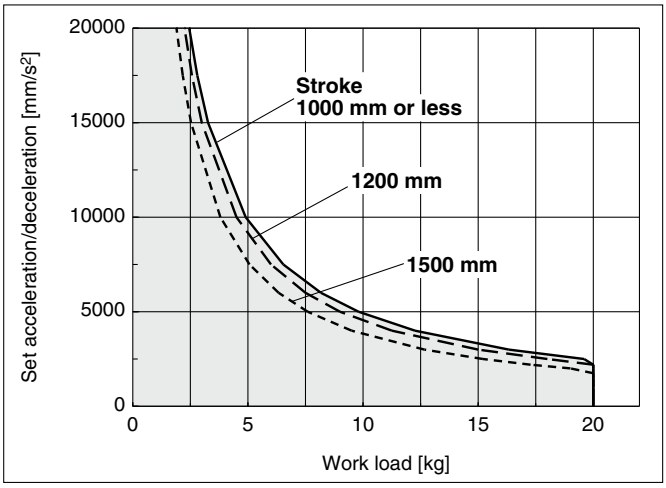

Static Allowable Moment∗1

Model	Size	Max. allowable moment [N·m]		
		M1	M2	M3
		Pitching	Rolling	Yawing
LEMC	**25**	5	4	3.5
	32	13	14	10
LEMH	**25**	7	6	7
	32	28	26	26
LEMHT	**25**	46	55	46
	32	100	120	100

∗1 The static allowable moment is the amount of static moment which can be applied to the actuator when it is stopped.
If the product is exposed to impact or repeated load, be sure to take adequate safety measures when using the product.

Dynamic Allowable Moment (LEMB Series)

∗ These graphs show the amount of allowable overhang (guide unit) when the center of gravity of the workpiece overhangs in one direction. When selecting the overhang, refer to the "Calculation of Guide Load Factor" for confirmation.

Acceleration/Deceleration —— 2500 mm/s² — — — 5000 mm/s² - - - - 10000 mm/s² ····· 20000 mm/s²

Orientation	Load overhanging direction **m** : Work load [mm] **Me**: Allowable moment [N·m] **L** : Overhang to the work load center of gravity [mm]		Model: **LEMB25/LEMB32**			
			Speed: 300 mm/s or less	Speed: 500 mm/s	Speed: 800 mm/s	Speed: 1000 mm/s
Horizontal/Bottom mounting	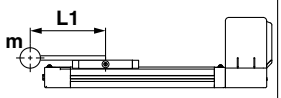	X	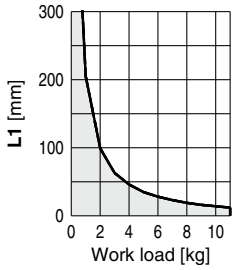	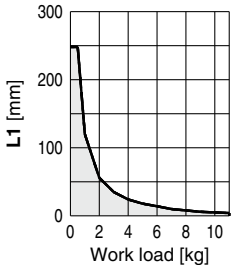	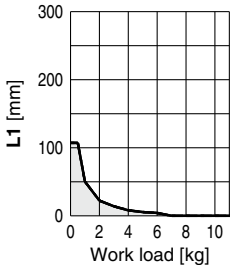	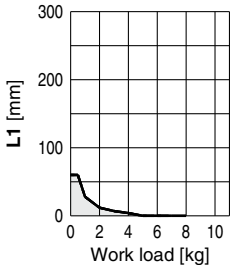
	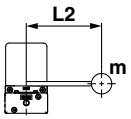	Y	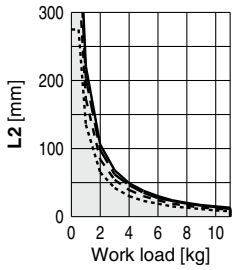	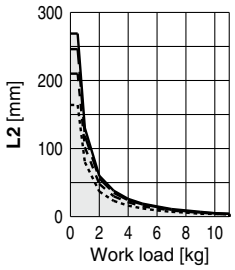	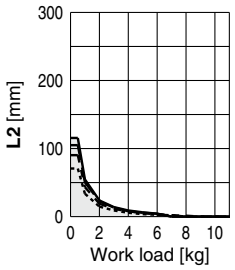	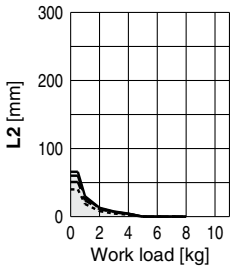
	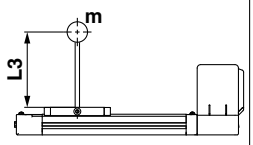	Z	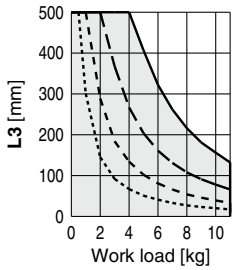	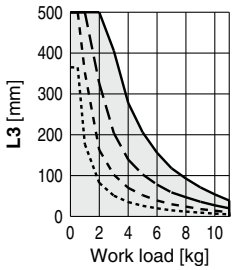	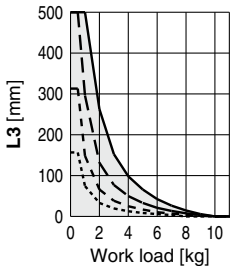	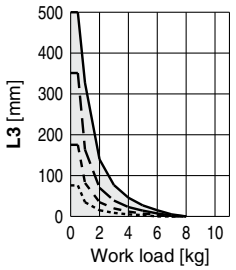
Wall mounting	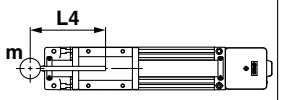	X	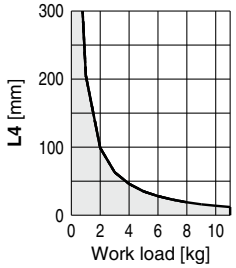	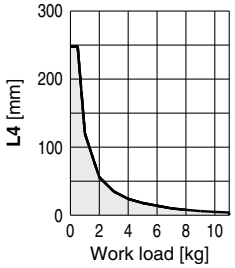	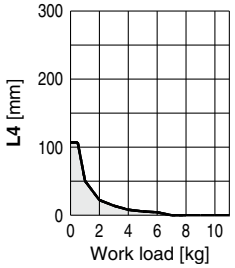	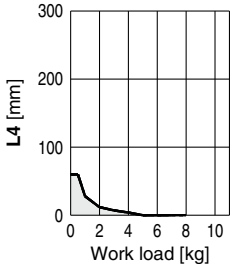
	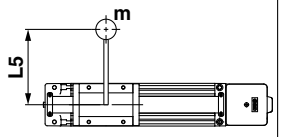	Y	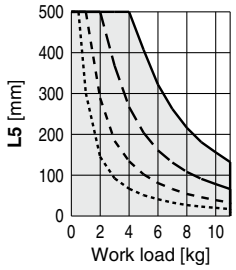	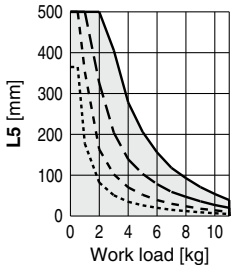	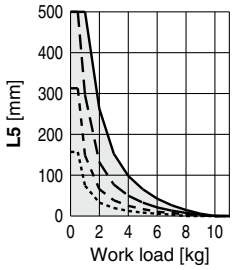	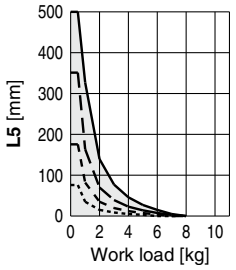
	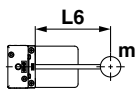	Z	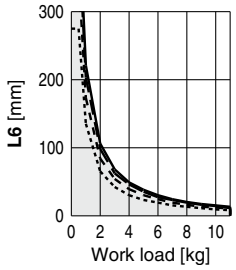	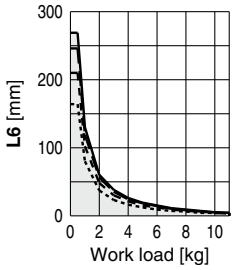	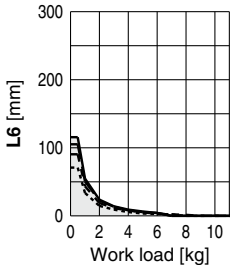	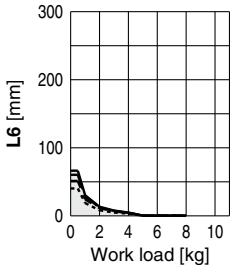

∗ Vertical mounting is not available.

Dynamic Allowable Moment (LEMC/LEMH Series)

∗ These graphs show the amount of allowable overhang (guide unit) when the center of gravity of the workpiece overhangs in one direction. When selecting the overhang, refer to the "Calculation of Guide Load Factor" for confirmation.

Acceleration/Deceleration —— 2500 mm/s² – – – 5000 mm/s² - - - - 10000 mm/s² ····· 20000 mm/s²

Orientation	Load overhanging direction **m** :Work load [mm] **Me**: Allowable moment [N·m] **L** : Overhang to the work load center of gravity [mm]		Model			
			LEMC25	**LEMC32**	**LEMH25**	**LEMH32**
Horizontal/Bottom mounting	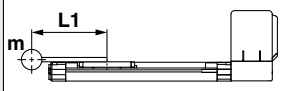	**X**	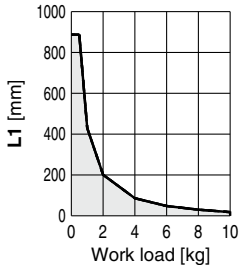	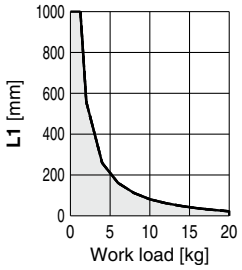	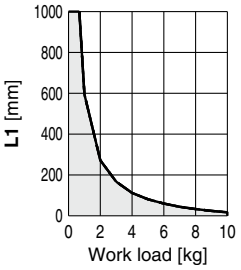	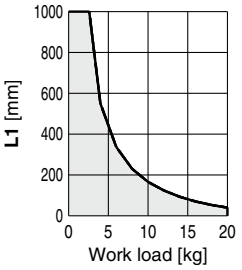
	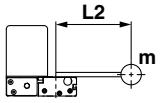	**Y**	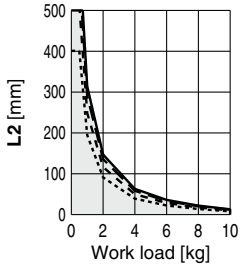	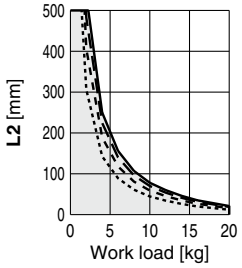	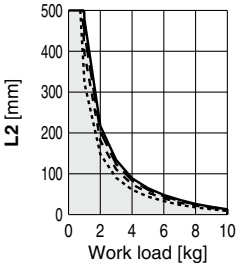	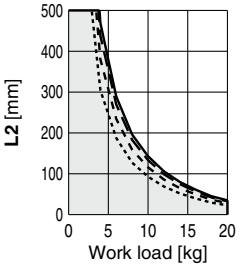
	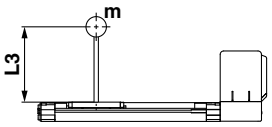	**Z**	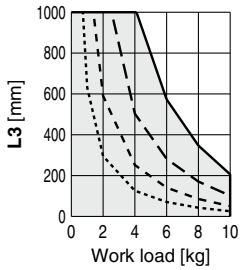	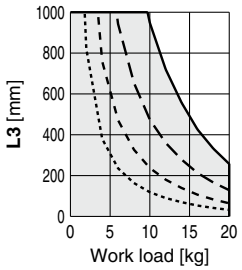	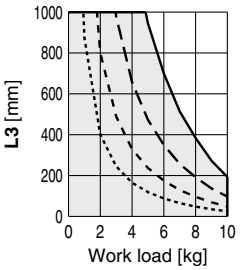	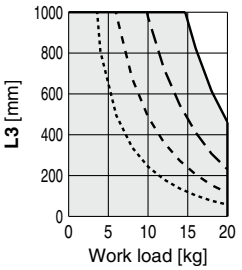
Wall mounting	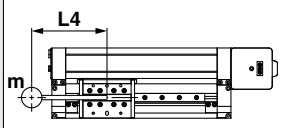	**X**	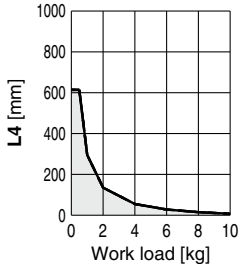	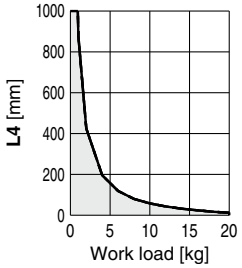	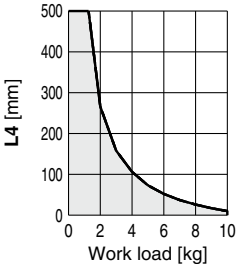	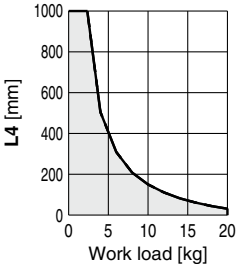
	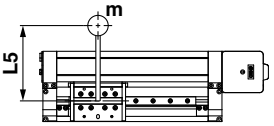	**Y**	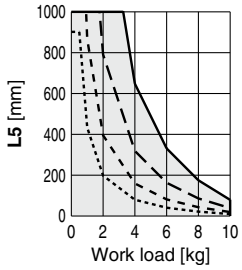	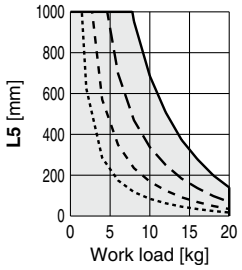	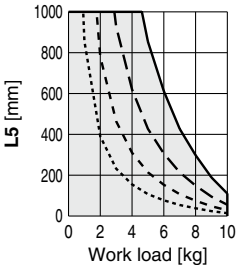	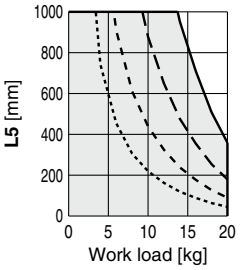
	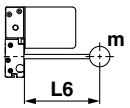	**Z**	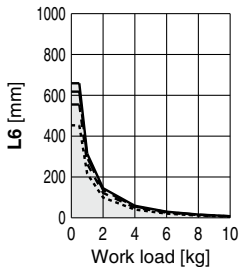	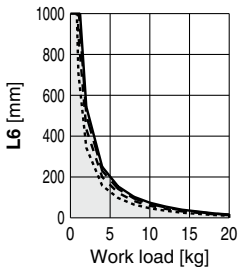	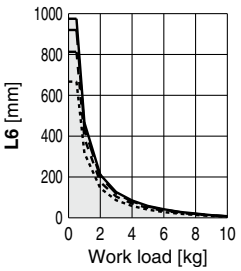	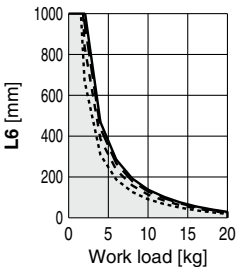

∗ Vertical mounting is not available.

Dynamic Allowable Moment (LEMHT Series)

∗ These graphs show the amount of allowable overhang (guide unit) when the center of gravity of the workpiece overhangs in one direction. When selecting the overhang, refer to the "Calculation of Guide Load Factor" for confirmation.

Acceleration/Deceleration ——— 2500 mm/s² — — — 5000 mm/s² - - - - 10000 mm/s² ····· 20000 mm/s²

Orientation	**Load overhanging direction** **m** : Work load [mm] **Me**: Allowable moment [N·m] **L** : Overhang to the work load center of gravity [mm]		Model	
			LEMHT25	**LEMHT32**
Horizontal/Bottom mounting	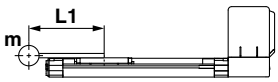	**X**	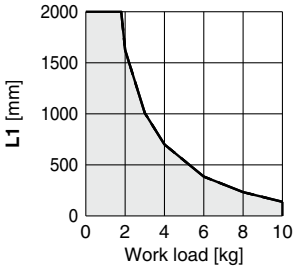	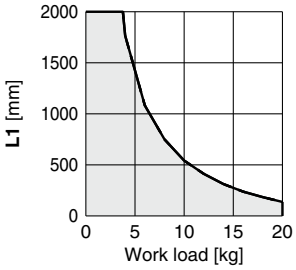
	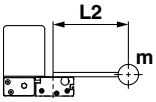	**Y**	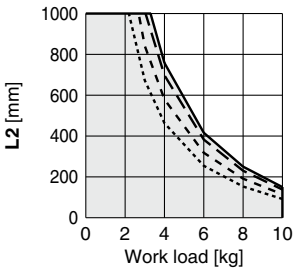	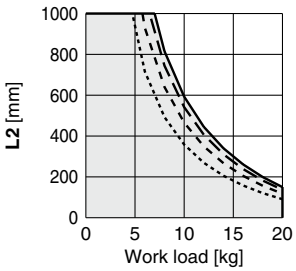
	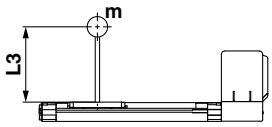	**Z**	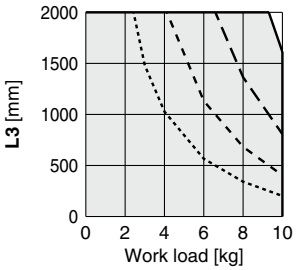	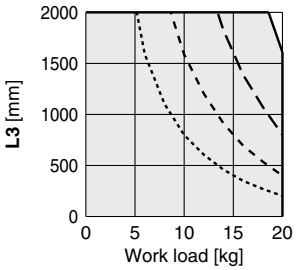
Wall mounting	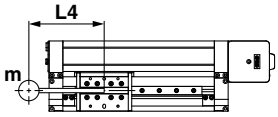	**X**	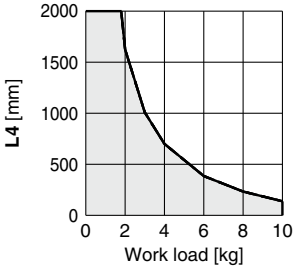	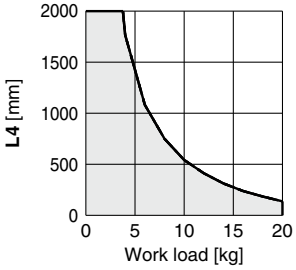
	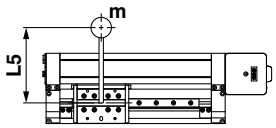	**Y**	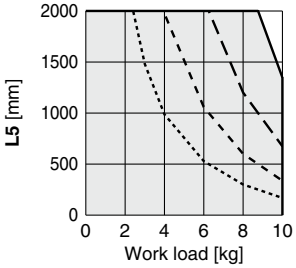	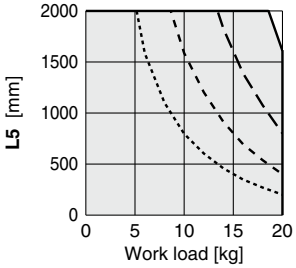
	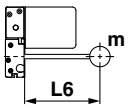	**Z**	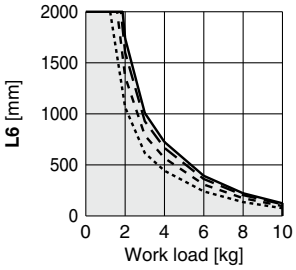	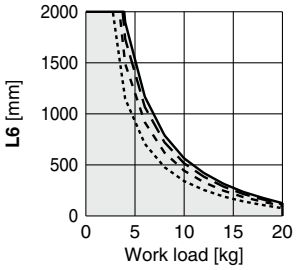

∗ Vertical mounting is not available.

Calculation of Guide Load Factor

1. Decide operating conditions.
   Model: LEM
   Size: 25/32
   Mounting orientation: Horizontal/Bottom/Wall
   Acceleration [mm/s²]: **a**
   Work load [kg]: **m**
   Work load center position [mm]: **Xc/Yc/Zc**
2. Select the target graph while referencing the model, size, and mounting orientation.
3. Based on the acceleration and work load, find the overhang [mm]: **Lx/Ly/Lz** from the graph.
4. Calculate the load factor for each direction.
   $\alpha x = Xc/Lx$, $\alpha y = Yc/Ly$, $\alpha z = Zc/Lz$
5. Confirm the total of αx, αy, and αz is 1 or less.
   $\alpha x + \alpha y + \alpha z \leq 1$
   When 1 is exceeded, please consider a reduction of acceleration and work load, or a change of the work load center position and series.

Mounting orientation

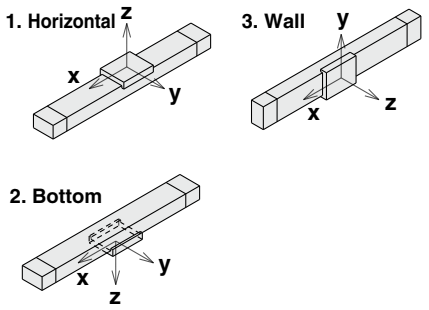

Example

1. Operating conditions
   Model: LEMH
   Size: 32
   Mounting orientation: Horizontal
   Acceleration [mm/s²]: 5000
   Work load [kg]: 5
   Work load center position [mm]: **Xc = 50**, **Yc = 100**, **Zc = 200**
2. Select three graphs from the top of the right side first row on page 368.
3. **Lx = 420 mm**, **Ly = 300 mm**, **Lz = 1000 mm**
4. The load factor for each direction can be found as follows.
   $\alpha x = 50/420 = 0.12$
   $\alpha y = 100/300 = 0.34$
   $\alpha z = 200/1000 = 0.2$
5. $\alpha x + \alpha y + \alpha z = 0.66 \leq 1$

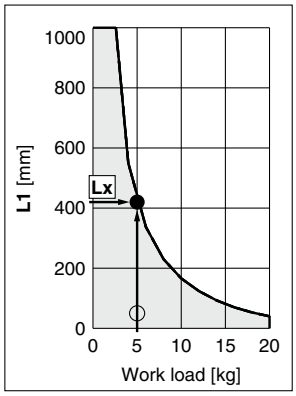

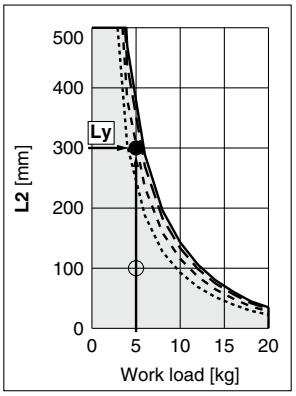

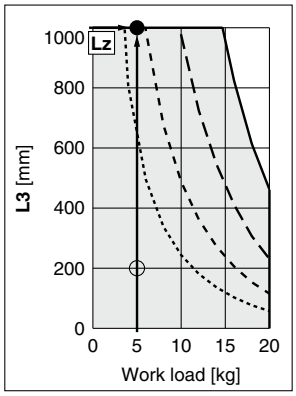

Incremental (Step Motor 24 VDC)

Low Profile Slider Type Basic Type

LEMB Series LEMB25, 32

* For details, refer to page 1343 and onward.

RoHS

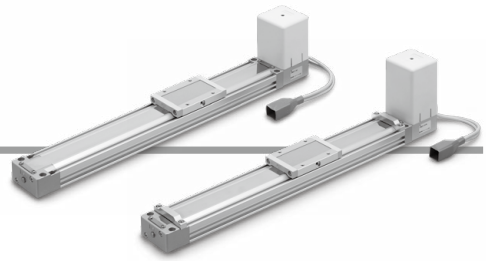

⚠Caution

LEM series	LEM□25 / LEM□32	←	E-MY series	E-MY□16 / E-MY□25

How to Order

LEMB 25 □ T – 300 □ □ – S1

❶ ❷ ❸ ❹ ❺ ❻ ❼

JXC□ Series

CD17T

LEC□ Series

2N ❽ 1 ❾ □ ❿

For details on controllers, refer to page 372.

❶ Size

25
32

❷ Motor mounting position

Nil	Top mounting
U	Bottom mounting

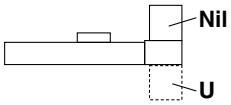

❸ Equivalent lead

T	48 mm

❹ Stroke*1 *2 [mm]

Stroke	None	
	Size	Applicable stroke
50 to 2000	25	50, 100, 150, 200, 250, 300, 350, 400, 450, 500, 550, 600, 700, 800, 900, 1000, **1100**, 1200, **1300**, **1400**, 1500, **1600**, **1700**, **1800**, **1900**, 2000
50 to 2000	32	

❺ Motor option

Nil	Without option
B	With lock

❻ Stroke adjustment unit (Included)

Nil	None
M	Motor side only
E	End side only
W	Both sides

❼ Actuator cable type/length*4

Standard cable [m]

Nil	None
S1	1.5
S3	3
S5	5

Robotic cable [m]

R1	1.5	RA	10*3
R3	3	RB	15*3
R5	5	RC	20*3
R8	8*3		

For auto switches, refer to pages 406 to 408.

JXC□ Series (For details, refer to page 373.)

❽ Controller

Nil	Without controller
C□1□□	With controller

C D 1 7 T

Interface (Communication protocol/Input/Output)

Symbol	Type	Number of axes, Special specification: Standard	With STO sub-function
5	Parallel input (NPN)	●	
6	Parallel input (PNP)	●	
E	EtherCAT	●	●
9	EtherNet/IP™	●	●
P	PROFINET	●	●
D	DeviceNet®	●	
L	IO-Link	●	●
M	CC-Link	●	

Mounting

7	Screw mounting
8*7	DIN rail

Number of axes, Special specification

Symbol	Number of axes	Specification
1	Single axis	Standard
F	Single axis	With STO sub-function

Communication plug connector, I/O cable*8

Symbol	Type	Applicable interface
Nil	Without accessory	—
S	Straight type communication plug connector	DeviceNet® CC-Link Ver. 1.10
T	T-branch type communication plug connector	
1	I/O cable (1.5 m)	Parallel input (NPN) Parallel input (PNP)
3	I/O cable (3 m)	
5	I/O cable (5 m)	

LEC□ Series (For details, refer to page 373.)

2N 1 □
❽ ❾ ❿

❽ Controller type

Nil	Without controller	
2N	**LECP2*5** (Programless type (With stroke study))	NPN
2P		PNP
1N	**LECP1** (Programless type)	NPN
1P		PNP

❾ I/O cable length*6

Nil	Without cable (Without communication plug connector)
1	1.5 m
3	3 m
5	5 m

❿ Controller mounting

Nil	Screw mounting
D	DIN rail*7

*1 Please contact SMC as all non-standard and non-made-to-order strokes are produced as special orders.
*2 The strokes in bold are produced upon receipt of order.
*3 Produced upon receipt of order (Robotic cable only)
*4 The standard cable should only be used on fixed parts. For use on moving parts, select the robotic cable. Refer to page 1092 if only the actuator cable is required.
*5 Select the LECP2 when setting the stroke range using the stroke adjustment unit or an external stopper.
*6 When "Without controller" is selected for controller types, I/O cable length cannot be selected. Refer to page 1056 (For LECP2), or page 1047 (For LECP1) if I/O cable is required.
*7 The DIN rail is not included. It must be ordered separately.
*8 Select "Nil" for anything other than DeviceNet®, CC-Link, or parallel input. Select "Nil," "S," or "T" for DeviceNet® or CC-Link. Select "Nil," "1," "3," or "5" for parallel input.

⚠Caution

[CE/UKCA-compliant products]

① EMC compliance was tested by combining the electric actuator LEM series and the controller LEC/JXC series. The EMC depends on the configuration of the customer's control panel and the relationship with other electrical equipment and wiring. Therefore, compliance with the EMC directive cannot be certified for SMC components incorporated into the customer's equipment under actual operating conditions. As a result, it is necessary for the customer to verify compliance with the EMC directive for the machinery and equipment as a whole.

[UL-compliant products (For the LEC series)]

When compliance with UL is required, the electric actuator and controller/driver should be used with a UL1310 Class 2 power supply.

The actuator and controller/driver are sold as a package.

(They can be ordered separately.)

Confirm that the combination of the controller/driver and the actuator is correct.

<Check the following before use.>

① Check the actuator label for the model number. This number should match that of the controller/driver.
② Check that the Parallel I/O configuration matches (NPN or PNP).

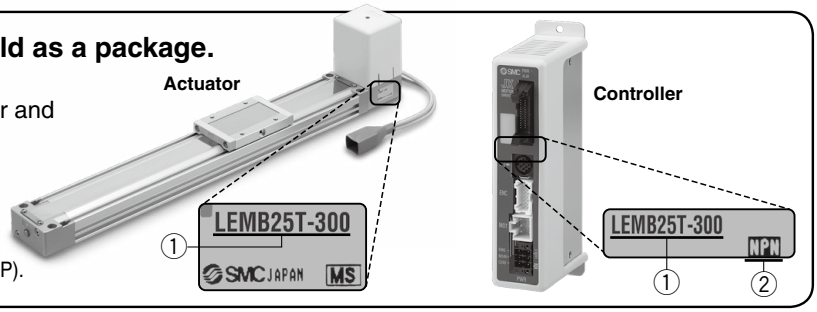

* Refer to the Operation Manual for using the products. Please download it via our website: https://www.smcworld.com

Compatible Controllers

Type	Step data input type	Programless type (With stroke study)	Programless type
			
Series	**JXC51** **JXC61**	**LECP2**	**LECP1**
Features	Parallel I/O	End to end operation similar to an air cylinder using the stroke study function	Capable of setting up operation (step data) without using a PC or teaching box
Compatible motor	Step motor (Servo/24 VDC)		
Max. number of step data	64 points	14 points (2 stroke end points + 12 intermediate points)	14 points
Power supply voltage	24 VDC		
Reference page	1017	1051	1042

Type	EtherCAT direct input type	EtherCAT direct input type with STO sub-function	EtherNet/IP™ direct input type	EtherNet/IP™ direct input type with STO sub-function	PROFINET direct input type	PROFINET direct input type with STO sub-function	DeviceNet® direct input type	IO-Link direct input type	IO-Link direct input type with STO sub-function	CC-Link direct input type
										
Series	**JXCE1**	**JXCEF**	**JXC91**	**JXC9F**	**JXCP1**	**JXCPF**	**JXCD1**	**JXCL1**	**JXCLF**	**JXCM1**
Features	EtherCAT direct input	EtherCAT direct input with STO sub-function	EtherNet/IP™ direct input	EtherNet/IP™ direct input with STO sub-function	PROFINET direct input	PROFINET direct input with STO sub-function	DeviceNet® direct input	IO-Link direct input	IO-Link direct input with STO sub-function	CC-Link direct input
Compatible motor	Step motor (Servo/24 VDC)									
Max. number of step data	64 points									
Power supply voltage	24 VDC									
Reference page	1063									

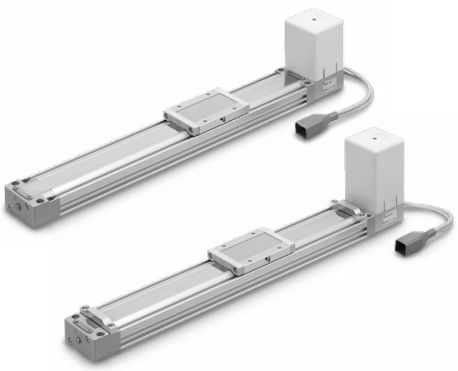

Specifications

Step Motor (Servo/24 VDC)

Model			LEMB25	LEMB32
Stroke [mm]*1			50, 100, 150, 200, 250 300, 350, 400, 450, 500 550, 600, 700, 800, 900 1000, (1100), 1200, (1300) (1400), 1500, (1600), (1700) (1800), (1900), 2000	50, 100, 150, 200, 250 300, 350, 400, 450, 500 550, 600, 700, 800, 900 1000, (1100), 1200, (1300) (1400), 1500, (1600), (1700) (1800), (1900), 2000
Actuator specifications	Work load [kg]*2	Horizontal	6 (10)	11 (20)
	Speed [mm/s]*2		48 to 1000 (Refer to Table 1 for set values when LECP1 or 2 is selected.)	
	Max. acceleration/deceleration [mm/s²]*7		20000 (Depends on the work load.)(Refer to Table 2 for set values when LECP1 or 2 is selected.)	
	Positioning repeatability [mm]		±0.08	
	Lost motion [mm]*8		0.1 or less	
	Lead [mm]		48	
	Actuation type		Belt	
	Guide type		Sliding bearing	
	Operating temperature range [°C]		5 to 40	
	Operating humidity range [%RH]		90 or less (No condensation)	
	Enclosure		IP30	
	Allowable external force [N]*6		10	20
Electric specifications	Motor size		□56.4	
	Motor type		Step motor (Servo/24 VDC)	
	Encoder		Incremental	
	Power supply voltage [V]		24 VDC±10%	
	Power [W]*3 *5		Max. power 123	Max. power 127
Lock unit specifications	Type*4		Non-magnetizing lock	
	Holding force [N]		36	
	Power consumption [W]*5		5	
	Rated voltage [V]		24 VDC ±10%	

*1 Please contact SMC as all non-standard and non-made-to-order strokes are produced as special orders.
*2 Speed changes according to the work load.
Check the "Speed–Work Load Graph (Guide)" on page 365. The work load changes according to the work load mounting condition. Check the "Dynamic Allowable Moment" on page 367.
Furthermore, if the cable length exceeds 5 m, then it will decrease by up to 10% for each 5 m.
( ): When combined with an external guide and the friction coefficient is 0.1 or less.
*3 Indicates the max. power during operation (including the controller)
This value can be used for the selection of the power supply.
*4 With lock only
*5 For an actuator with lock, add the power consumption for the lock.
*6 The resistance value of the attached equipment should be within the allowable external resistance value.
*7 Maximum acceleration and deceleration are limited by the work load and stroke.
Refer to the "Work Load–Acceleration/Deceleration Graph (Guide)" on page 366.
*8 A reference value for correcting errors in reciprocal operation

Speed/Acceleration (Set values for LECP1/2)

Table 1 Switch and Speed*1

Switch no.	Speed [mm/s]
0	48
1	75
2	100
3	150
4	200
5	250
6	300
7	350
8	400
9	450
10	500
11	600
12	700
13	800
14	900
15	1000

Table 2 Switch and Acceleration*1

Switch no.	Acceleration [mm/s²]
0	250
1	500
2	1000
3	1500
4	2000
5	2500
6	3000
7	4000
8	5000
9	6000
10	7500
11	10000
12	12500
13	15000
14	17500
15	20000

*1 The factory default setting for the switch is No. 0.

Weight

Stroke		50	100	150	200	250	300	350	400	450	500	550	600	700	800	900	1000	(1100)	1200	(1300)	(1400)	1500	(1600)	(1700)	(1800)	(1900)	2000
Product weight [kg]	LEMB25	1.66	1.75	1.84	1.92	2.01	2.10	2.19	2.27	2.37	2.45	2.54	2.62	2.80	2.97	3.15	3.33	3.50	3.68	3.85	4.03	4.20	4.38	4.55	4.73	4.90	5.08
	LEMB32	2.02	2.11	2.20	2.29	2.38	2.47	2.55	2.64	2.73	2.82	2.91	3.00	3.17	3.35	3.53	3.70	3.88	4.06	4.23	4.41	4.59	4.76	4.94	5.12	5.29	5.47
Additional weight with lock [kg]		0.60																									

Construction

LEMB

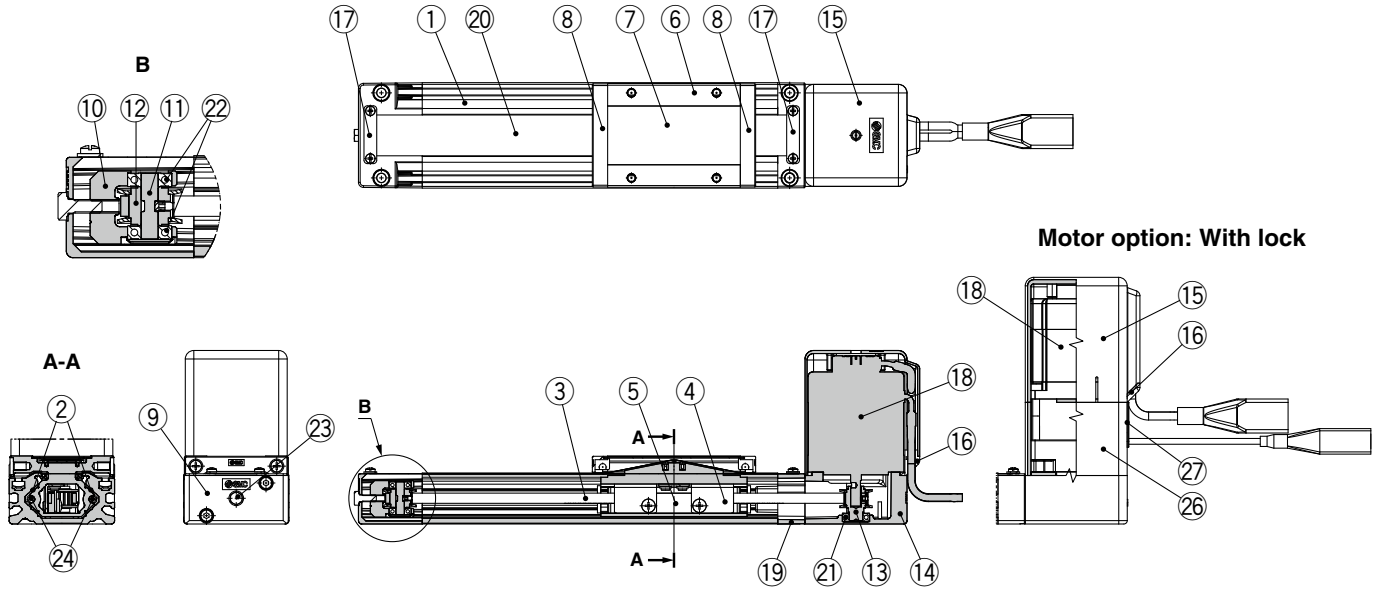

Option: Stroke adjustment unit

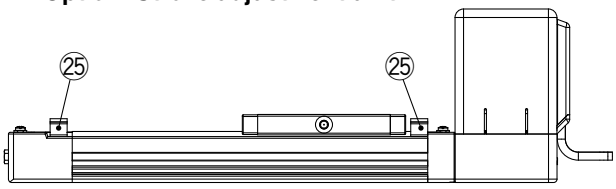

Component Parts

No.	Description	Material	Note
1	**Body**	Aluminum alloy	Anodized
2	**Guide plate**	Synthetic resin	
3	**Belt**	—	
4	**Belt holder**	Carbon steel	Chromating
5	**Belt stopper**	Aluminum alloy	
6	**Table**	Aluminum alloy	Anodized
7	**Blanking plate**	Aluminum alloy	Anodized
8	**Seal band holder**	Synthetic resin	
9	**End block**	Aluminum die-casted	Painting
10	**Pulley holder**	Aluminum alloy	
11	**Pulley shaft**	Stainless steel	Heat treatment + Special treatment
12	**Pulley**	Aluminum alloy	Anodized
13	**Motor pulley**	Aluminum alloy	Anodized
14	**Motor mount**	Aluminum die-casted	Painting
15	**Motor cover**	Synthetic resin	
16	**Grommet**	Synthetic resin	
17	**Band stopper**	Stainless steel	
18	**Motor**	—	

Component Parts

No.	Description	Material	Note
19	**Motor end block**	Aluminum die-casted	Painting
20	**Dust seal band**	Stainless steel	
21	**Bearing**	—	
22	**Bearing**	—	
23	**Hexagon bolt**	Carbon steel	Chromating
24	**Magnet**	—	
25	**Stroke adjuster**	Aluminum alloy	Anodized (Optional)
26	**Motor cover for lock**	Aluminum alloy	Anodized Only “with lock”
27	**Grommet**	CR	Chloroprene rubber Only “with lock”

Replacement Parts/Grease Pack

Applied portion	Order no.
Guide plate	GR-S-010 (10 g)
Dust seal band	GR-S-020 (20 g)

Dimensions Size 25

Refer to page 994 and after for dimensions of the controllers.

Top mounting
LEMB25T-□□-□□□□□

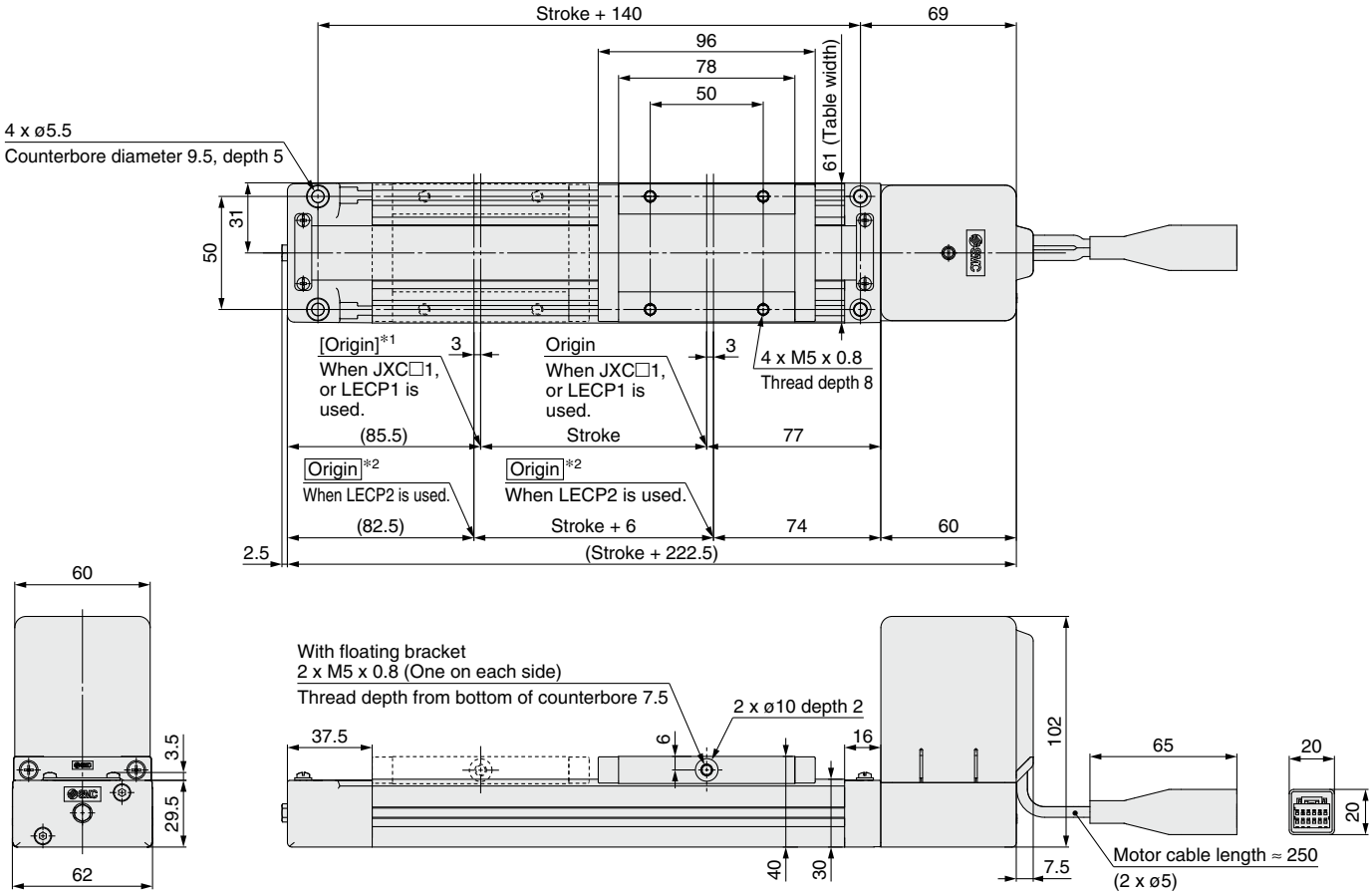

*1 [ ] for when the direction of return to origin has changed (When the JXC□1, or LECP1 is used.)
*2 Origin for when the LECP2 is used. The movable stroke is "Stroke + 6 mm."

Top mounting
With lock
LEMB25T-□B□-□□□□□

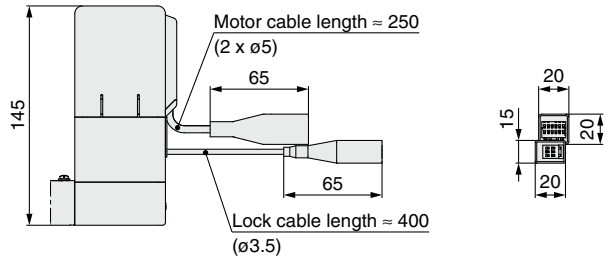

Bottom mounting
With lock
LEMB25UT-□B□-□□□□□

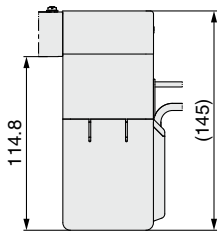

Bottom mounting
LEMB25UT-□□-□□□□□

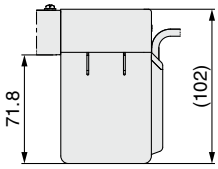

Stroke adjustment unit mounting position
LEMB25□T-□□M/E/W-□□□□□

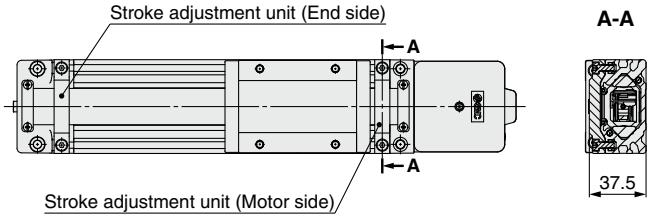

Dimensions Size 32

Refer to page 994 and after for dimensions of the controllers.

Top mounting
LEMB32T-□□-□□□□□

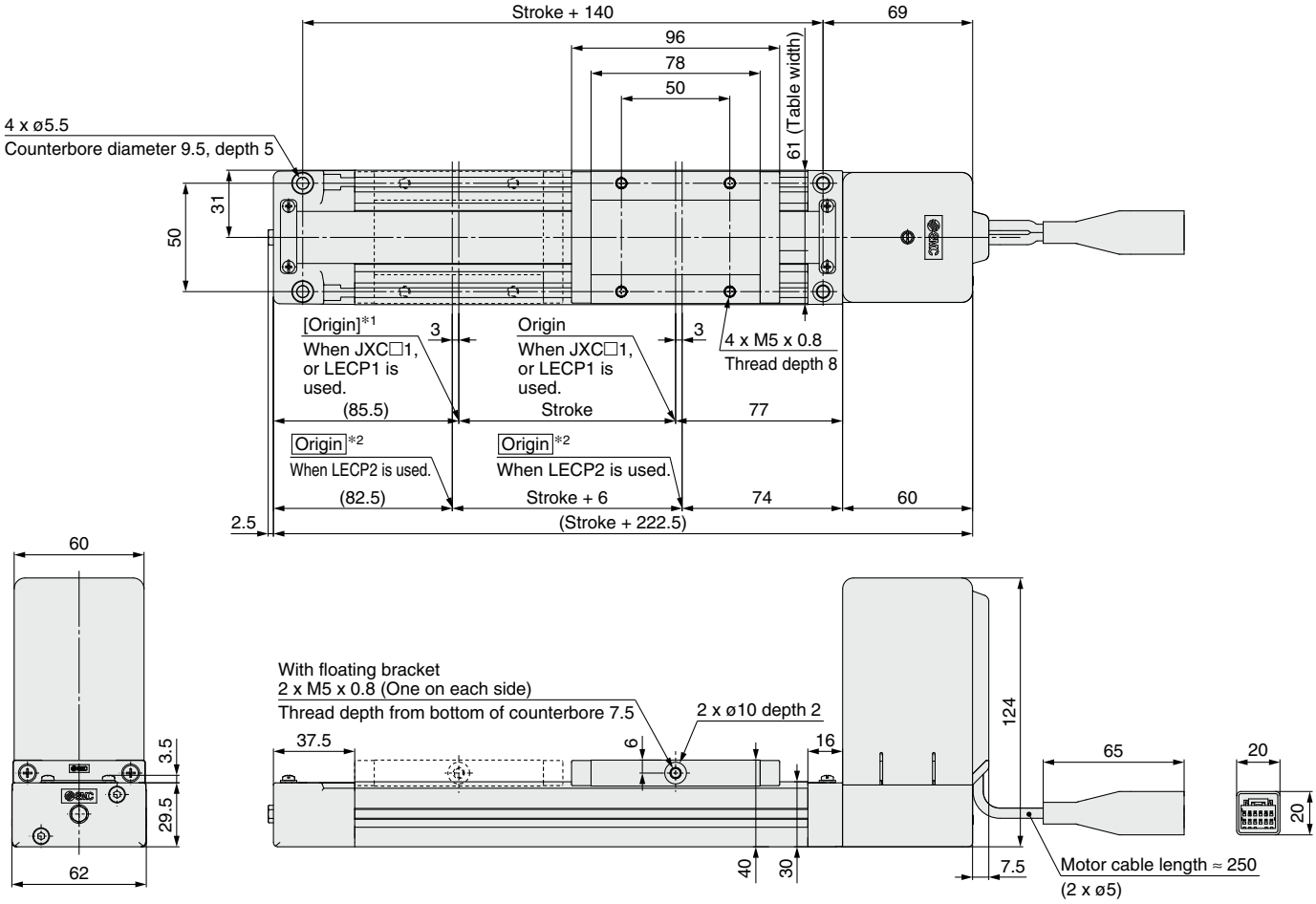

*1 [ ] for when the direction of return to origin has changed (When the JXC□1, or LECP1 is used.)
*2 Origin for when the LECP2 is used. The movable stroke is "Stroke + 6 mm."

Top mounting
With lock
LEMB32T-□B□-□□□□□

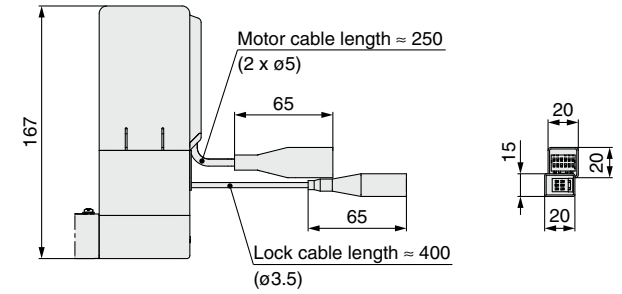

Bottom mounting
With lock
LEMB32UT-□B□-□□□□□

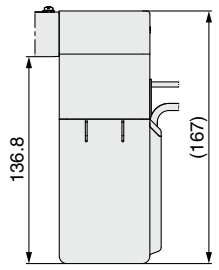

Bottom mounting
LEMB32UT-□□-□□□□□

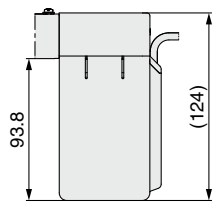

Stroke adjustment unit mounting position
LEMB32□T-□□M/E/W-□□□□□

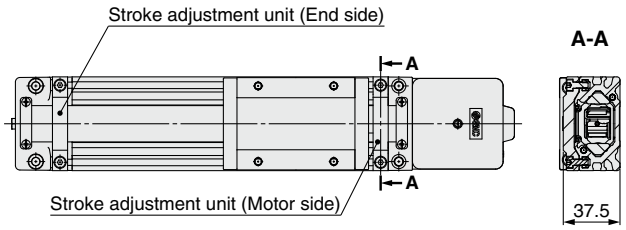

Side Supports

Side support A
MY-S25A

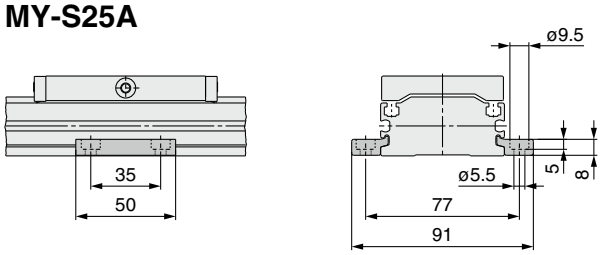

Side support B
MY-S25B

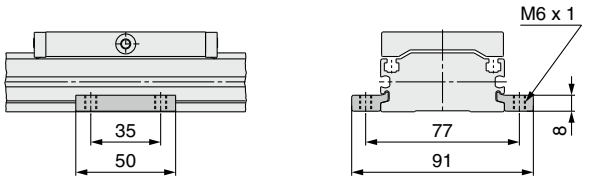

∗ The side supports consist of a set of right and left brackets.

Usage Guide for Side Supports

When using an actuator with a longer stroke, implement intermediate support to prevent frame deflection or deflection caused by vibration or external impacts. The spacing (**L**) of the intermediate supports must be no more than the values shown in the following graph.

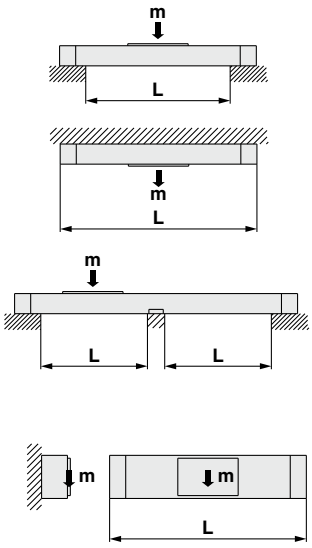

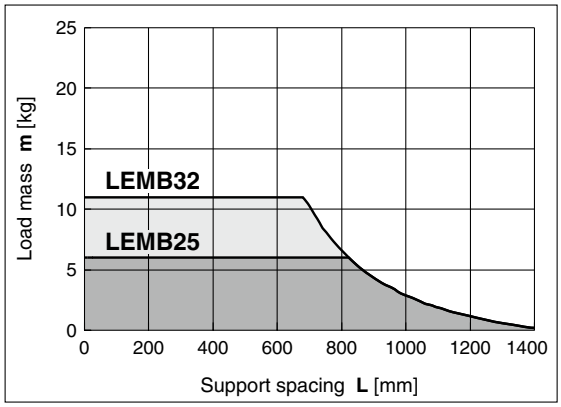

⚠ Caution

1. If the actuator mounting surfaces are not measured accurately, using the intermediate support may cause poor operation. Make sure to level the mounting surface when mounting the actuator. For long stroke operation involving overhang of the workpiece, implement intermediate support as recommended even if the support spacing is within the allowable limits shown in the graph. For the intermediate support, order a side support separately.
2. Support brackets are not for mounting. Use them solely for providing support.

Floating Bracket

MYAJ25 ∗ Mounting direction ① and ② are available for this model.

Application Example

Mounting direction ① (to minimize the installation height)

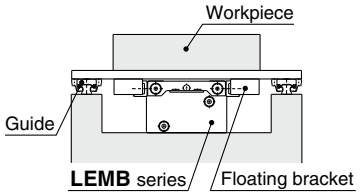

Application Example

Mounting direction ② (to minimize the installation width)

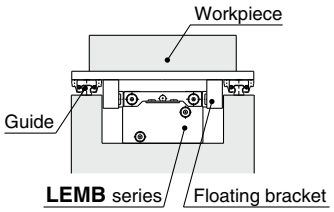

Mounting Example

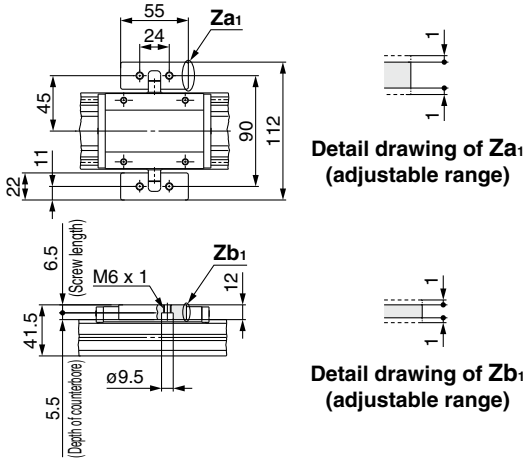

Mounting Example

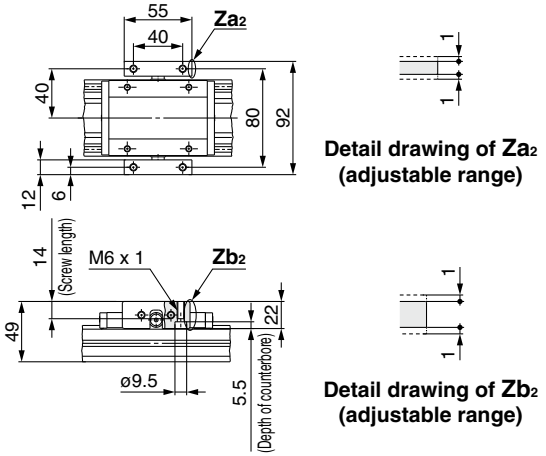

Floating Parts Dimensions

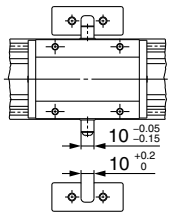

Installation of Retaining Screws

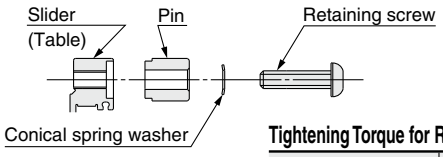

Tightening Torque for Retaining Screws [N·m]

Model	Tightening torque
MYAJ25	3

Stroke Adjustment Unit

LEMB-AJ

∗ Stroke adjustment unit includes the stroke adjuster and mounting screws.

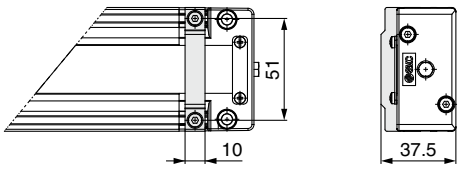

Mounting

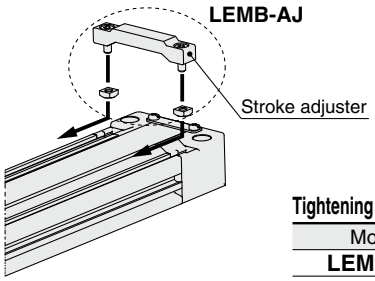

Tightening Torque for Retaining Screws [N·m]

Model	Tightening torque
LEMB-AJ	1.5

Incremental (Step Motor 24 VDC)

Low Profile Slider Type
Cam Follower Guide Type

∗ For details, refer to page 1343 and onward.

LEMC Series LEMC25, 32

RoHS

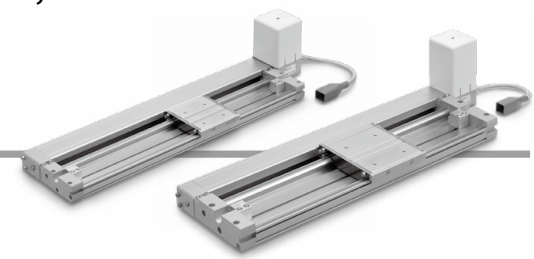

⚠Caution

LEM series	LEM□25
	LEM□32

←

E-MY series	E-MY□16
	E-MY□25

How to Order

LEMC 25 □ T – 300 □ – S1

❶ ❷ ❸ ❹ ❺ ❻

JXC□ Series
CD17T

LEC□ Series
2N 1 □

❼ ❽ ❾

For details on controllers, refer to page 382.

❶ Size

25
32

❷ Motor mounting position

Nil	Top mounting
U	Bottom mounting
L	Symmetric, Top mounting
LU	Symmetric, Bottom mounting

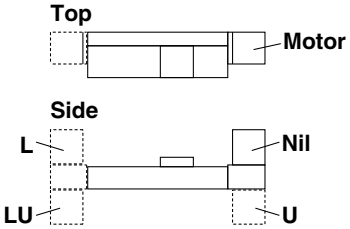

❸ Equivalent lead

T	48 mm

❹ Stroke∗1 ∗2 [mm]

Stroke	None	
	Size	Applicable stroke
50 to 2000	25	50, 100, 150, 200, 250, 300, 350, 400, 450, 500, 550, 600, 700, 800, 900, 1000, **1100**, 1200, **1300**, **1400**, 1500, **1600**, **1700**, **1800**, **1900**, 2000
50 to 2000	32	

❺ Motor option

Nil	Without option
B	With lock

❻ Actuator cable type/length∗4

Standard cable [m]

Nil	None
S1	1.5
S3	3
S5	5

Robotic cable [m]

R1	1.5	RA	10∗3
R3	3	RB	15∗3
R5	5	RC	20∗3
R8	8∗3		

The stroke adjustment unit is built into the product.

For auto switches, refer to pages 406 to 408.

JXC□ Series (For details, refer to page 383.)

❼ Controller

Nil	Without controller
C□1□□	With controller

C D 1 7 T

Interface (Communication protocol/Input/Output)

Symbol	Type	Number of axes, Special specification: Standard	With STO sub-function
5	Parallel input (NPN)	●	
6	Parallel input (PNP)	●	
E	EtherCAT	●	●
9	EtherNet/IP™	●	●
P	PROFINET	●	●
D	DeviceNet®	●	
L	IO-Link	●	●
M	CC-Link	●	

Mounting

7	Screw mounting
8*7	DIN rail

Number of axes, Special specification

Symbol	Number of axes	Specification
1	Single axis	Standard
F	Single axis	With STO sub-function

Communication plug connector, I/O cable*8

Symbol	Type	Applicable interface
Nil	Without accessory	—
S	Straight type communication plug connector	DeviceNet® CC-Link Ver. 1.10
T	T-branch type communication plug connector	
1	I/O cable (1.5 m)	Parallel input (NPN) Parallel input (PNP)
3	I/O cable (3 m)	
5	I/O cable (5 m)	

LEC□ Series (For details, refer to page 383.)

2N 1 □
❼ ❽ ❾

❼ Controller type

Nil	Without controller	
2N	**LECP2***5 (Programless type (With stroke study))	NPN
2P		PNP
1N	**LECP1** (Programless type)	NPN
1P		PNP

❽ I/O cable length*6

Nil	Without cable (Without communication plug connector)
1	1.5 m
3	3 m
5	5 m

❾ Controller mounting

Nil	Screw mounting
D	DIN rail*7

*1 Please contact SMC as all non-standard and non-made-to-order strokes are produced as special orders.
*2 The strokes in bold are produced upon receipt of order.
*3 Produced upon receipt of order (Robotic cable only)
*4 The standard cable should only be used on fixed parts. For use on moving parts, select the robotic cable. Refer to page 1092 if only the actuator cable is required.
*5 Select the LECP2 when setting the stroke range using the stroke adjustment unit or an external stopper.
*6 When "Without controller" is selected for controller types, I/O cable length cannot be selected. Refer to page 1056 (For LECP2), or page 1047 (For LECP1) if I/O cable is required.
*7 The DIN rail is not included. It must be ordered separately.
*8 Select "Nil" for anything other than DeviceNet®, CC-Link, or parallel input. Select "Nil," "S," or "T" for DeviceNet® or CC-Link. Select "Nil," "1," "3," or "5" for parallel input.

⚠Caution

[CE/UKCA-compliant products]

① EMC compliance was tested by combining the electric actuator LEM series and the controller LEC/JXC series. The EMC depends on the configuration of the customer's control panel and the relationship with other electrical equipment and wiring. Therefore, compliance with the EMC directive cannot be certified for SMC components incorporated into the customer's equipment under actual operating conditions. As a result, it is necessary for the customer to verify compliance with the EMC directive for the machinery and equipment as a whole.

[UL-compliant products (For the LEC series)]

When compliance with UL is required, the electric actuator and controller/driver should be used with a UL1310 Class 2 power supply.

The actuator and controller/driver are sold as a package.

(They can be ordered separately.)

Confirm that the combination of the controller/driver and the actuator is correct.

<Check the following before use.>

① Check the actuator label for the model number. This number should match that of the controller/driver.

② Check that the Parallel I/O configuration matches (NPN or PNP).

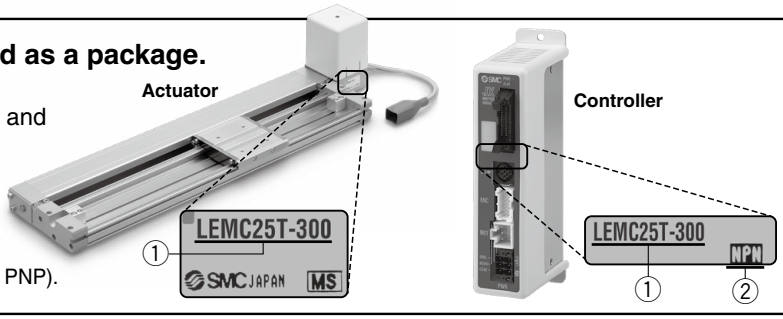

* Refer to the Operation Manual for using the products. Please download it via our website: https://www.smcworld.com

Compatible Controllers

Type	Step data input type	Programless type (With stroke study)	Programless type
			
Series	**JXC51** **JXC61**	**LECP2**	**LECP1**
Features	Parallel I/O	End to end operation similar to an air cylinder using the stroke study function	Capable of setting up operation (step data) without using a PC or teaching box
Compatible motor	Step motor (Servo/24 VDC)		
Max. number of step data	64 points	14 points (2 stroke end points + 12 intermediate points)	14 points
Power supply voltage	24 VDC		
Reference page	1017	1051	1042

Type	EtherCAT direct input type	EtherCAT direct input type with STO sub-function	EtherNet/IP™ direct input type	EtherNet/IP™ direct input type with STO sub-function	PROFINET direct input type	PROFINET direct input type with STO sub-function	DeviceNet® direct input type	IO-Link direct input type	IO-Link direct input type with STO sub-function	CC-Link direct input type
										
Series	**JXCE1**	**JXCEF**	**JXC91**	**JXC9F**	**JXCP1**	**JXCPF**	**JXCD1**	**JXCL1**	**JXCLF**	**JXCM1**
Features	EtherCAT direct input	EtherCAT direct input with STO sub-function	EtherNet/IP™ direct input	EtherNet/IP™ direct input with STO sub-function	PROFINET direct input	PROFINET direct input with STO sub-function	DeviceNet® direct input	IO-Link direct input	IO-Link direct input with STO sub-function	CC-Link direct input
Compatible motor	Step motor (Servo/24 VDC)									
Max. number of step data	64 points									
Power supply voltage	24 VDC									
Reference page	1063									

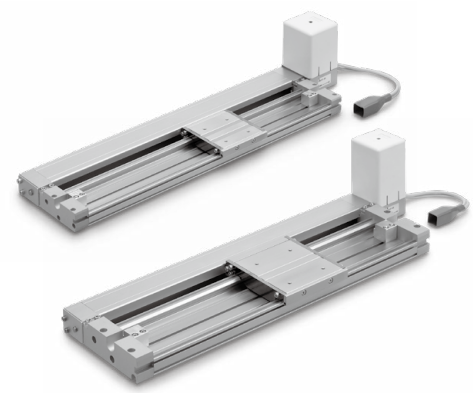

Speed/Acceleration (Set values for LECP1/2)

Table 1 Switch and Speed*1

Switch no.	Speed [mm/s]
0	48
1	75
2	100
3	150
4	200
5	250
6	300
7	350
8	400
9	450
10	500
11	600
12	700
13	800
14	900
15	1000

Table 2 Switch and Acceleration*1

Switch no.	Acceleration [mm/s²]
0	250
1	500
2	1000
3	1500
4	2000
5	2500
6	3000
7	4000
8	5000
9	6000
10	7500
11	10000
12	12500
13	15000
14	17500
15	20000

*1 The factory default setting for the switch is No. 0.

Specifications

Step Motor (Servo/24 VDC)

Model			LEMC25	LEMC32
Stroke [mm]*1			50, 100, 150, 200, 250 300, 350, 400, 450, 500 550, 600, 700, 800, 900 1000, (1100), 1200, (1300) (1400), 1500, (1600), (1700) (1800), (1900), 2000	50, 100, 150, 200, 250 300, 350, 400, 450, 500 550, 600, 700, 800, 900 1000, (1100), 1200, (1300) (1400), 1500, (1600), (1700) (1800), (1900), 2000
Actuator specifications	Work load [kg]*2	Horizontal	10	20
	Speed [mm/s]*2		48 to 1000 (Refer to Table 1 for set values when LECP1 or 2 is selected.)	
	Max. acceleration/deceleration [mm/s²]*7		20000 (Depends on the work load.)(Refer to Table 2 for set values when LECP1 or 2 is selected.)	
	Positioning repeatability [mm]		±0.08	
	Lost motion [mm]*8		0.1 or less	
	Lead [mm]		48	
	Actuation type		Belt	
	Guide type		Cam follower guide	
	Static allowable moment*9 [N·m]	Mep (Pitching)	5	13
		Mey (Yawing)	3.5	10
		Mer (Rolling)	4	14
	Operating temperature range [°C]		5 to 40	
	Operating humidity range [%RH]		90 or less (No condensation)	
	Enclosure		IP10	
	Allowable external force [N]*6		10	20
Electric specifications	Motor size		□56.4	
	Motor type		Step motor (Servo/24 VDC)	
	Encoder		Incremental	
	Power supply voltage [V]		24 VDC±10%	
	Power [W]*3 *5		Max. power 123	Max. power 127
Lock unit specifications	Type*4		Non-magnetizing lock	
	Holding force [N]		36	
	Power consumption [W]*5		5	
	Rated voltage [V]		24 VDC ±10%	

*1 Please contact SMC as all non-standard and non-made-to-order strokes are produced as special orders.
*2 Speed changes according to the work load.
Check the "Speed–Work Load Graph (Guide)" on page 365.
The work load changes according to the work load mounting condition.
Check the "Dynamic Allowable Moment" on page 368.
Furthermore, if the cable length exceeds 5 m, then it will decrease by up to 10% for each 5 m.
*3 Indicates the max. power during operation (including the controller)
This value can be used for the selection of the power supply.
*4 With lock only
*5 For an actuator with lock, add the power consumption for the lock.
*6 The resistance value of the attached equipment should be within the allowable external resistance value.
*7 Maximum acceleration and deceleration are limited by the work load and stroke.
Refer to the "Work Load–Acceleration/Deceleration Graph (Guide)" on page 366.
*8 A reference value for correcting errors in reciprocal operation
*9 The static allowable moment is the amount of static moment which can be applied to the actuator when it is stopped.
If the product is exposed to impact or repeated load, be sure to take adequate safety measures when using the product.

Weight

Stroke		50	100	150	200	250	300	350	400	450	500	550	600	700	800	900	1000	(1100)	1200	(1300)	(1400)	1500	(1600)	(1700)	(1800)	(1900)	2000
Product weight [kg]	LEMC25	2.04	2.18	2.32	2.46	2.60	2.74	2.88	3.01	3.15	3.29	3.43	3.57	3.85	4.12	4.40	4.68	4.95	5.23	5.51	5.79	6.06	6.34	6.62	6.90	7.17	7.45
	LEMC32	3.85	4.06	4.27	4.49	4.70	4.91	5.12	5.33	5.55	5.76	5.97	6.18	6.61	7.03	7.45	7.88	8.30	8.72	9.15	9.57	10.00	10.42	10.84	11.27	11.69	12.11
Additional weight with lock [kg]		0.60																									

Construction

LEMC

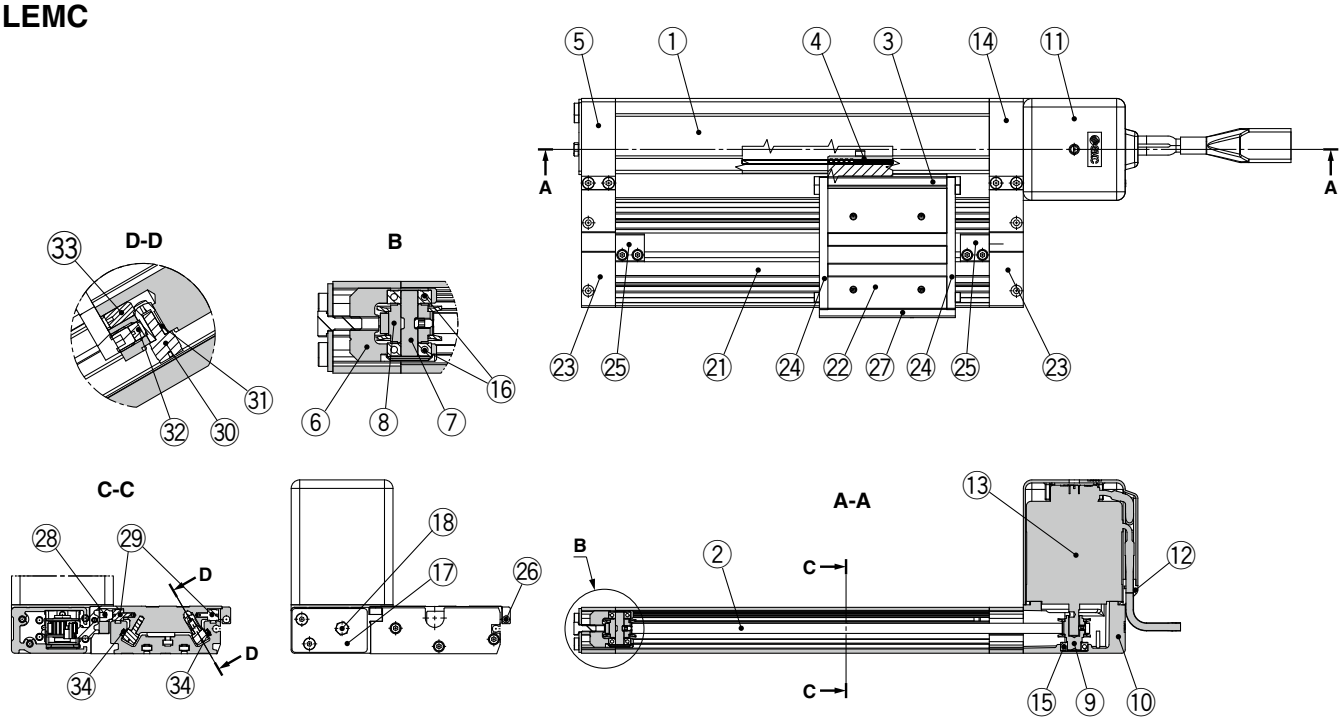

Motor option: With lock

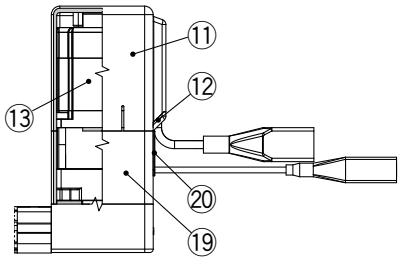

Component Parts

No.	Description	Material	Note
1	**Body**	Aluminum alloy	Anodized
2	**Belt**	—	
3	**L-type bracket**	Aluminum alloy	Anodized
4	**Belt stopper**	Aluminum alloy	
5	**End block**	Aluminum alloy	Anodized
6	**Pulley holder**	Aluminum alloy	
7	**Pulley shaft**	Stainless steel	Heat treatment + Special treatment
8	**Pulley**	Aluminum alloy	Anodized
9	**Motor pulley**	Aluminum alloy	Anodized
10	**Motor mount**	Aluminum die-casted	Painting
11	**Motor cover**	Synthetic resin	
12	**Grommet**	Synthetic resin	
13	**Motor**	—	
14	**Motor end block**	Aluminum alloy	Anodized
15	**Bearing**	—	
16	**Bearing**	—	
17	**Tension plate**	Aluminum alloy	Anodized
18	**Hexagon bolt**	Carbon steel	Chromating
19	**Motor cover for lock**	Aluminum alloy	Anodized Only “with lock”
20	**Grommet**	CR	Chloroprene rubber Only “with lock”

Component Parts

No.	Description	Material	Note
21	**Guide unit body**	Aluminum alloy	Anodized
22	**Slide table**	Aluminum alloy	Anodized
23	**End plate**	Aluminum alloy	Anodized
24	**Stopper**	Carbon steel	Nickel plating
25	**Stroke adjuster**	Aluminum alloy	Anodized
26	**Magnet**	—	
27	**Side cover**	Aluminum alloy	Anodized
28	**Cam follower cap**	Aluminum alloy	Anodized
29	**Cam follower**	—	
30	**Cam follower**	—	
31	**Eccentric gear**	Stainless steel	
32	**Gear bracket**	Stainless steel	
33	**Adjustment gear**	Stainless steel	
34	**Rail**	Hard steel wire material	

Replacement Parts/Grease Pack

Applied portion	Order no.
Rail	GR-S-010 (10 g) GR-S-020 (20 g)

Dimensions Size 25

Refer to page 994 and after for dimensions of the controllers.

Top mounting
LEMC25T-□-□□□□□

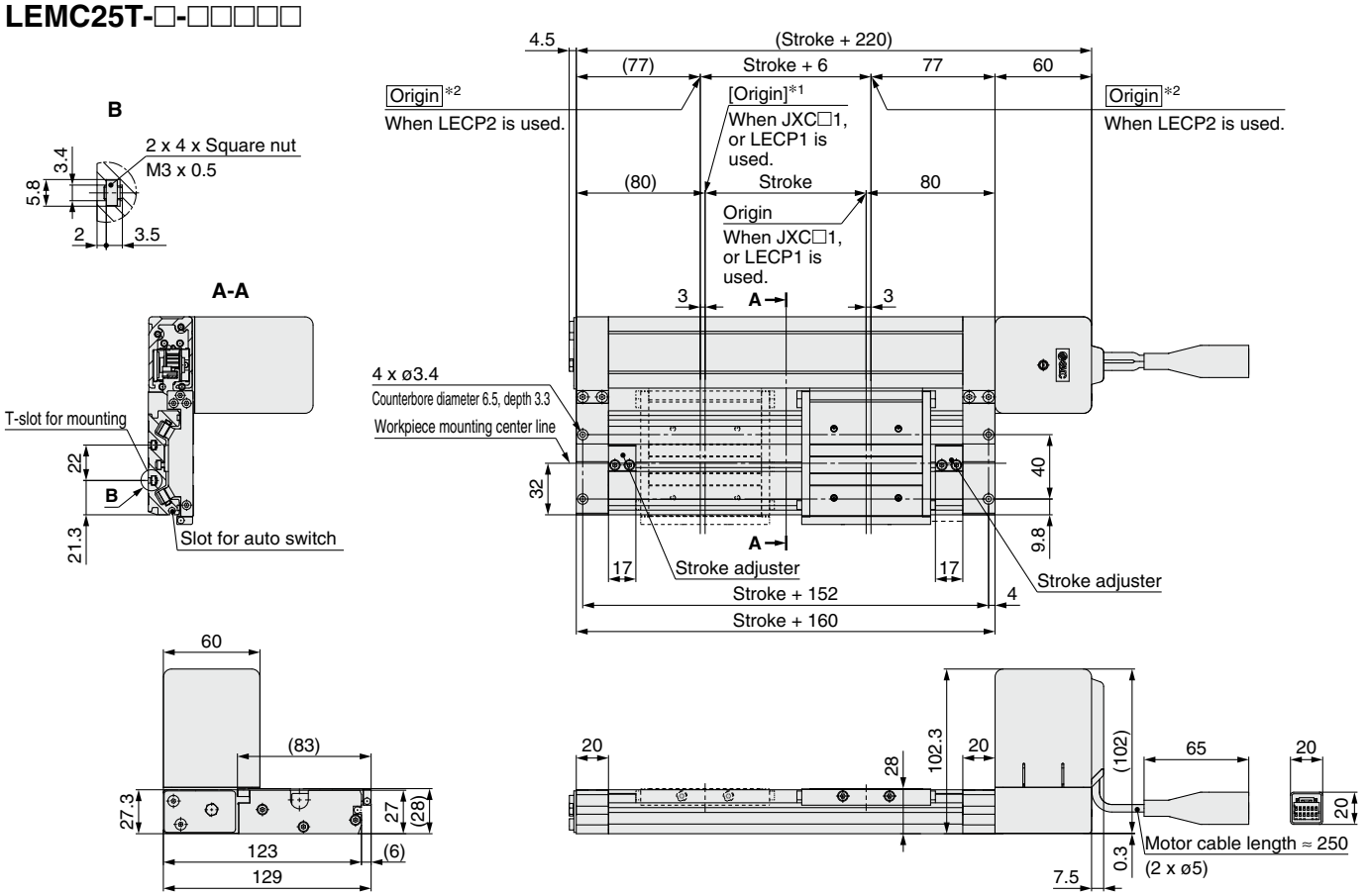

*1 [ ] for when the direction of return to origin has changed (When the JXC□1, or LECP1 is used.)
*2 Origin for when the LECP2 is used. The movable stroke is "Stroke + 6 mm."

Top mounting
With lock
LEMC25T-□B-□□□□□

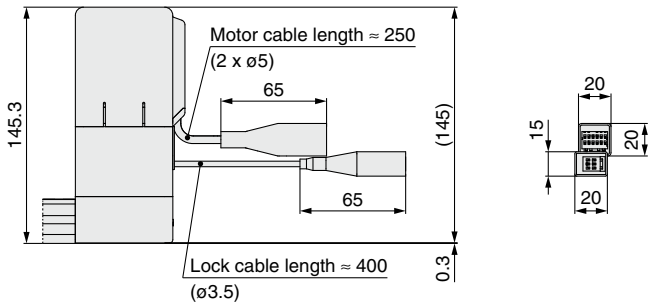

Bottom mounting
With lock
LEMC25UT-□B-□□□□□

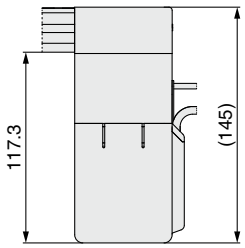

Bottom mounting
LEMC25UT-□-□□□□□

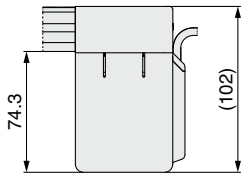

Table details

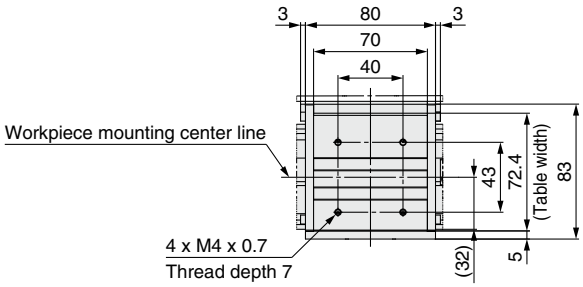

Dimensions Size 25

Refer to page 994 and after for dimensions of the controllers.

Symmetric/Top mounting
LEMC25LT-□-□□□□□

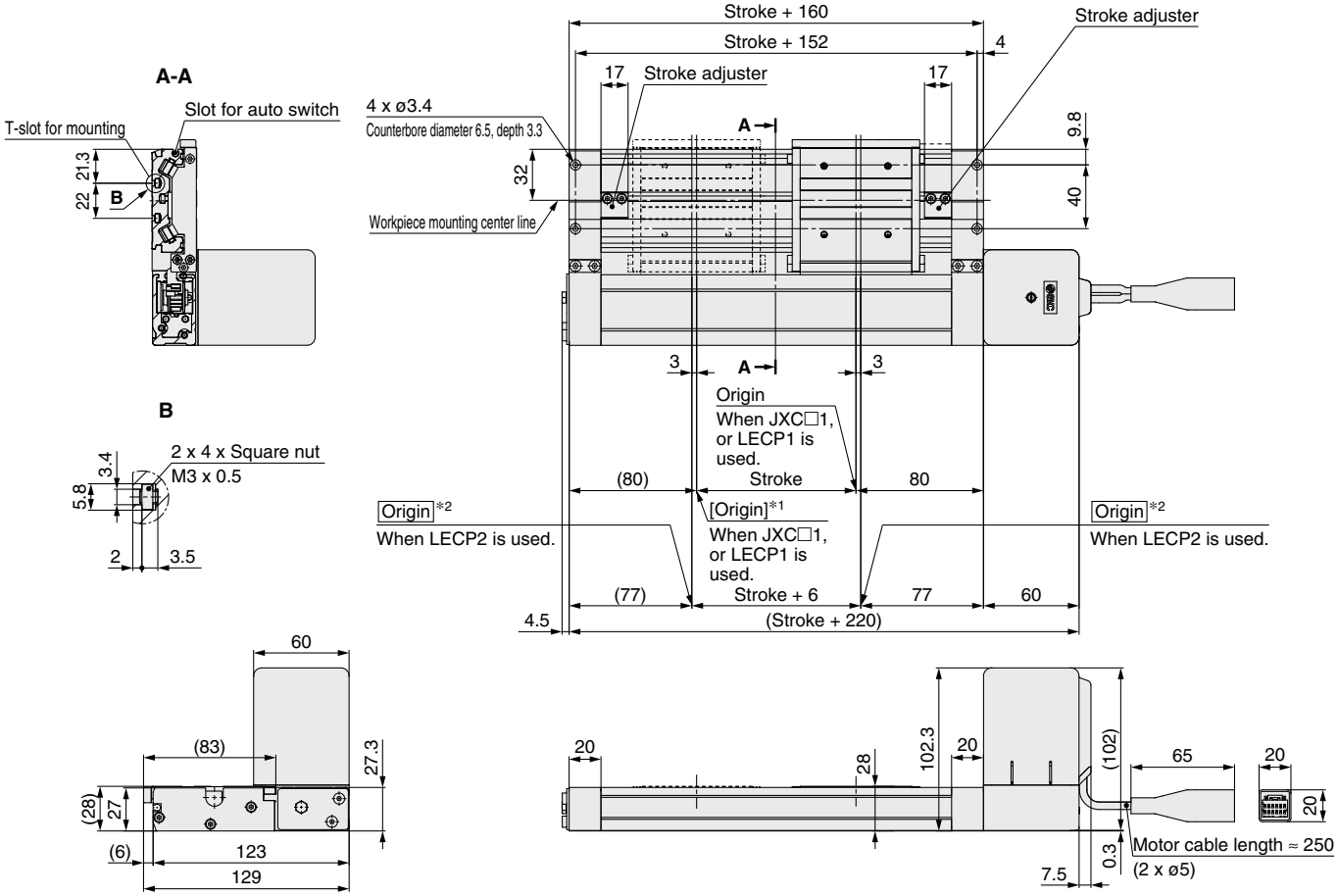

*1 [ ] for when the direction of return to origin has changed (When the JXC□1, or LECP1 is used.)
*2 Origin for when the LECP2 is used. The movable stroke is "Stroke + 6 mm."

Top mounting
With lock
LEMC25LT-□B-□□□□□

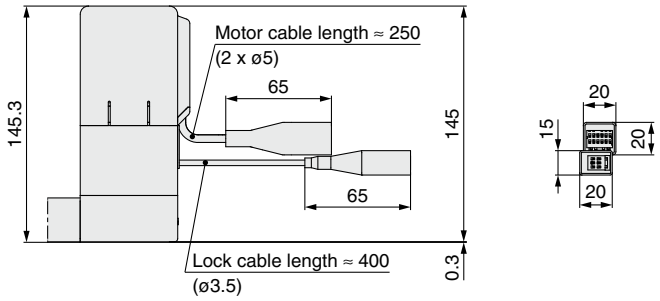

Bottom mounting
With lock
LEMC25LUT-□B-□□□□□

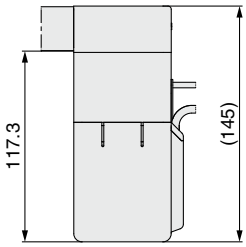

Bottom mounting
LEMC25LUT-□-□□□□□

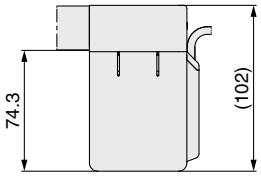

Table details

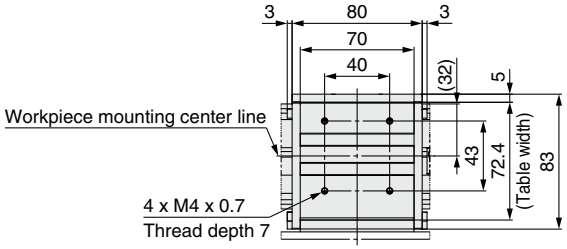

Dimensions Size 32

Refer to page 994 and after for dimensions of the controllers.

Top mounting
LEMC32T-□-□□□□□

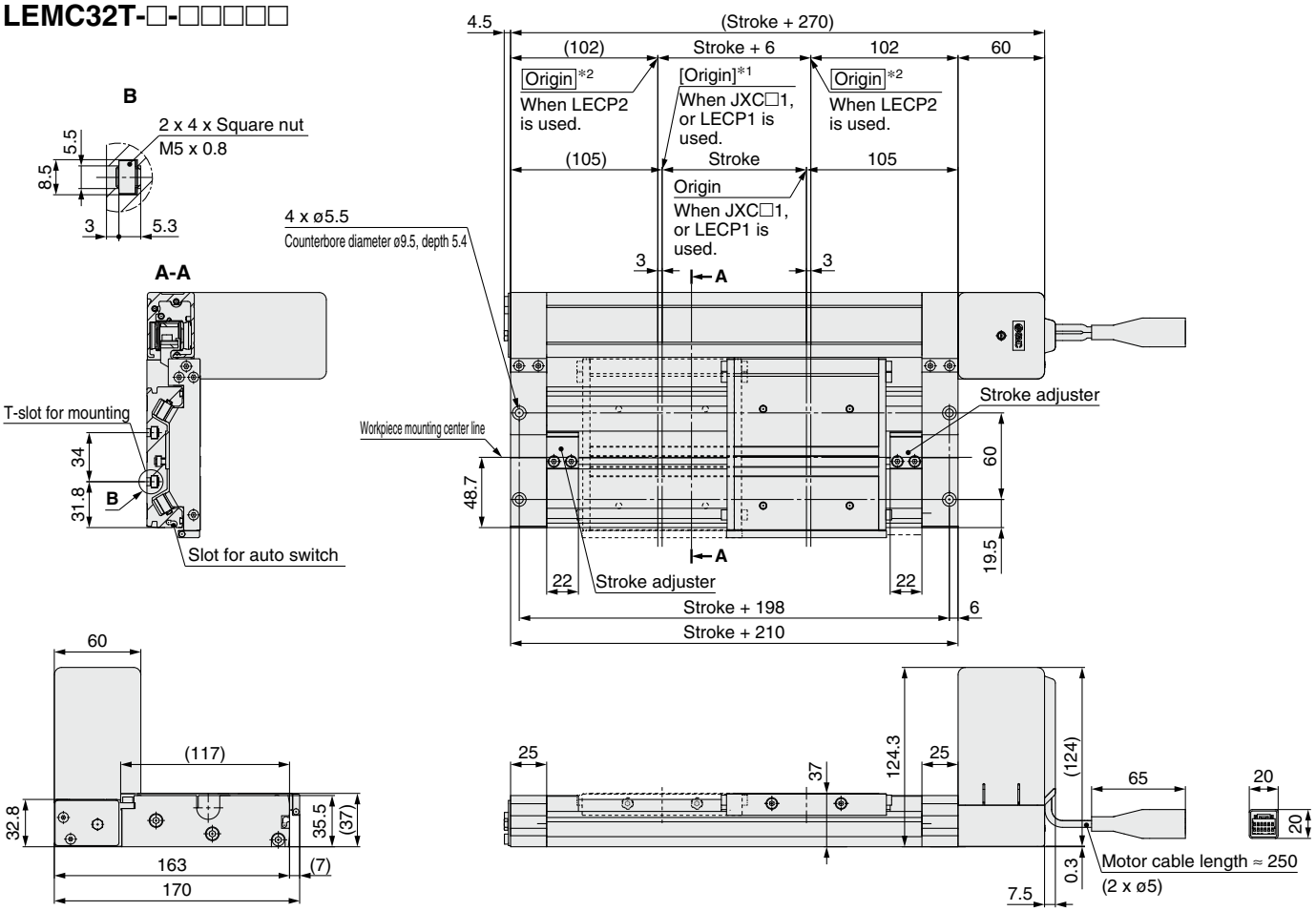

*1 [ ] for when the direction of return to origin has changed (When the JXC□1, or LECP1 is used.)
*2 Origin for when the LECP2 is used. The movable stroke is "Stroke + 6 mm."

Top mounting
With lock
LEMC32T-□B-□□□□□

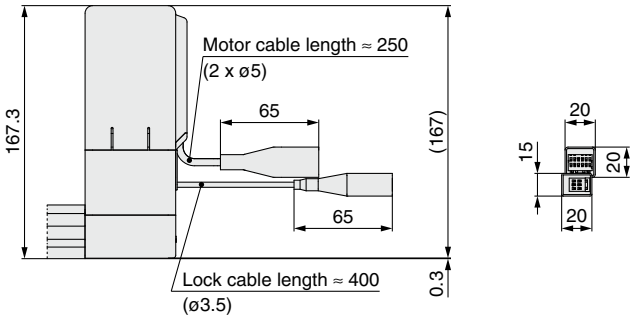

Bottom mounting
With lock
LEMC32UT-□B-□□□□□

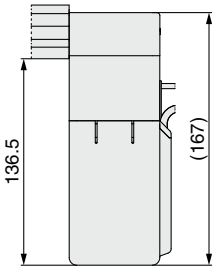

Bottom mounting
LEMC32UT-□-□□□□□

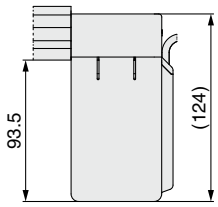

Table details

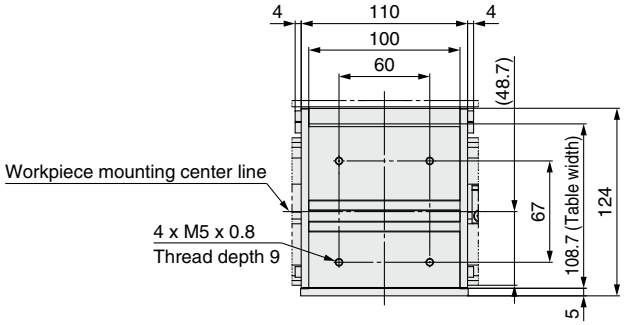

Dimensions Size 32

Refer to page 994 and after for dimensions of the controllers.

Symmetric/Top mounting

LEMC32LT-□-□□□□□

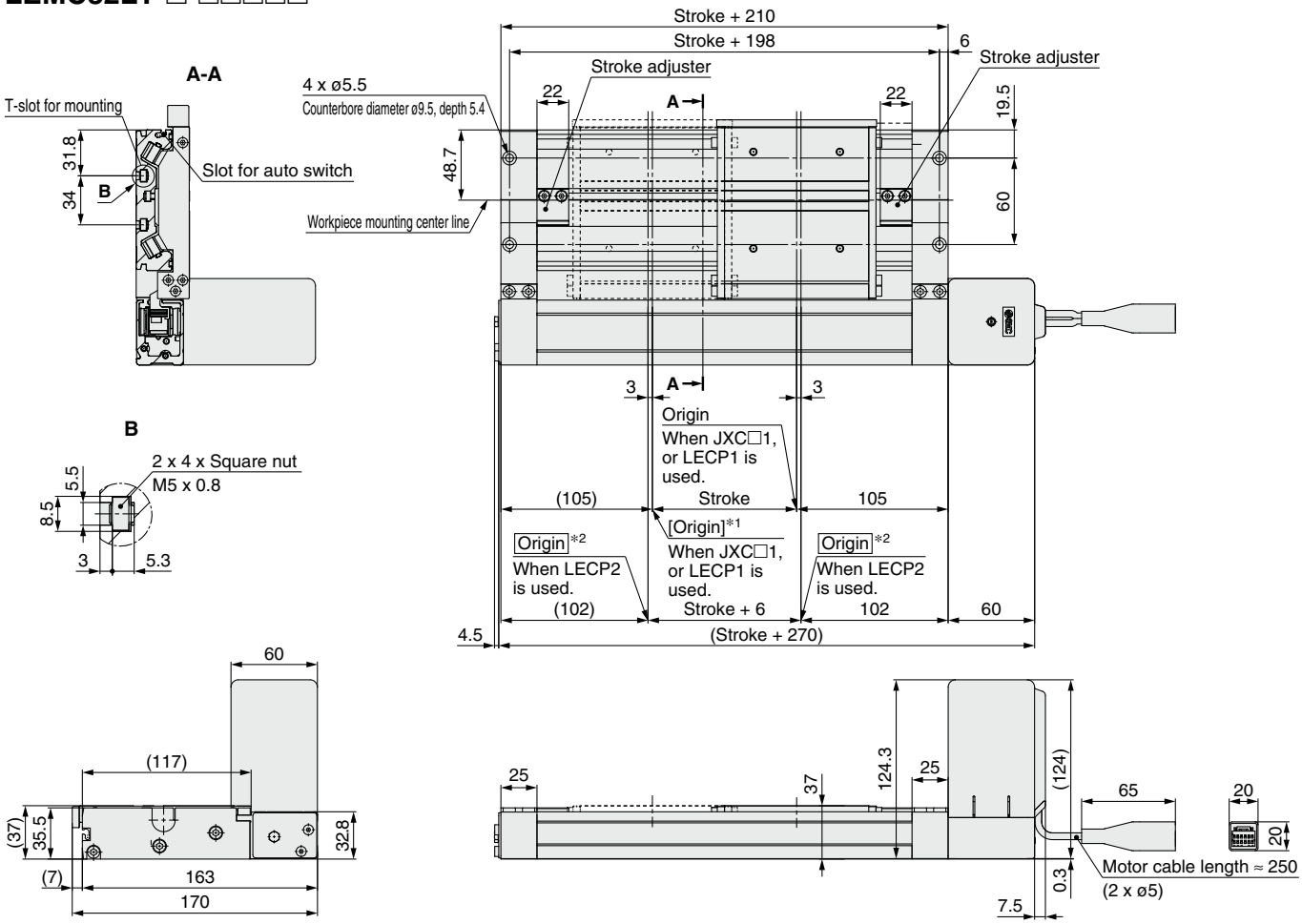

*1 [ ] for when the direction of return to origin has changed (When the JXC□1, or LECP1 is used.)
*2 Origin for when the LECP2 is used. The movable stroke is "Stroke + 6 mm."

Top mounting

With lock

LEMC32LT-□B-□□□□□

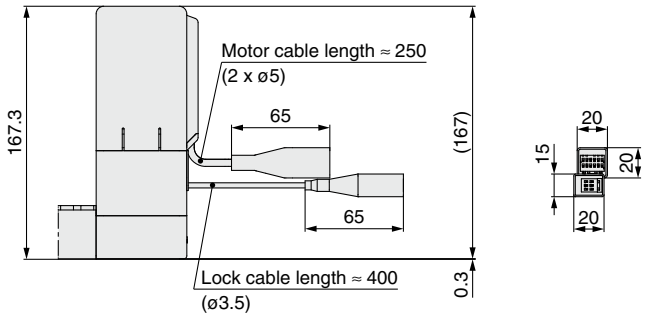

Bottom mounting

With lock

LEMC32LUT-□B-□□□□□

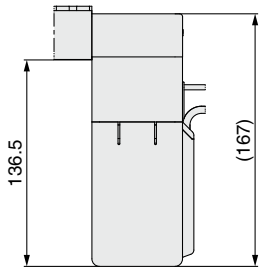

Bottom mounting

LEMC32LUT-□-□□□□□

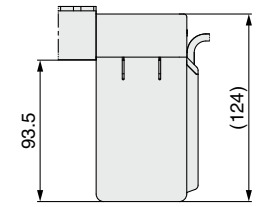

Table details

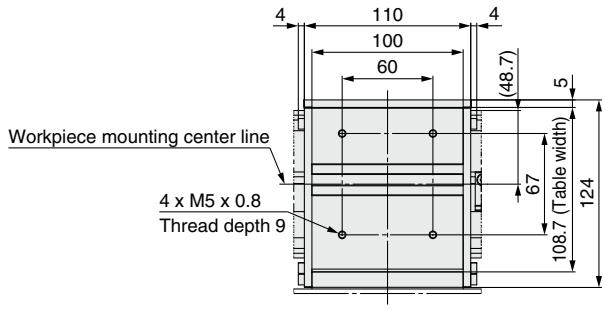

Side Supports

Side supports
MYC-S□A

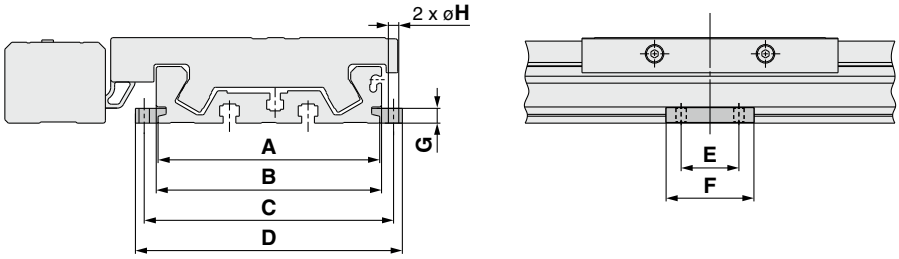

Model	Applicable actuator	A	B	C	D	E	F	G	øH
MYC-S16A	**LEMC25**	60.6	64.6	70.6	77.2	15	26	4.9	3.4
MYC-S25A	**LEMC32**	95.9	97.5	107.9	115.5	25	38	6.4	4.5

∗ The side supports consist of a set of right and left brackets.

Usage Guide for Side Supports

When using an actuator with a longer stroke, implement intermediate support to prevent frame deflection or deflection caused by vibration or external impacts. The spacing (**L**) of the intermediate supports must be no more than the values shown in the following graph.

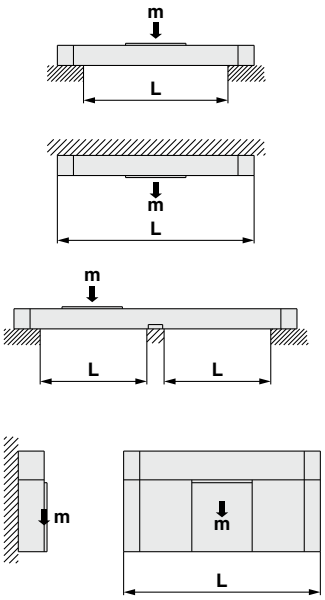

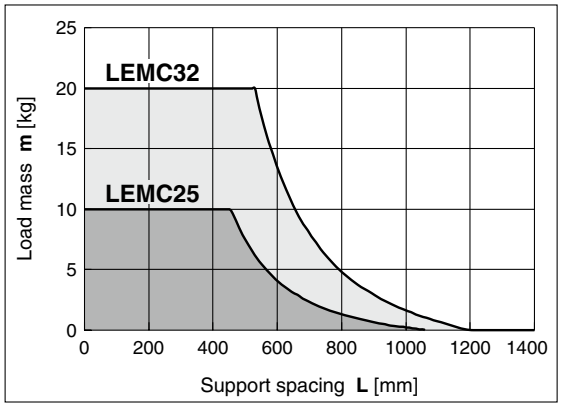

⚠ Caution

1. If the actuator mounting surfaces are not measured accurately, using the intermediate support may cause poor operation. Make sure to level the mounting surface when mounting the actuator. For long stroke operation involving overhang of the workpiece, implement intermediate support as recommended even if the support spacing is within the allowable limits shown in the graph. For the intermediate support, use the square nuts at the bottom of the body or order a side support separately.
2. Support brackets are not for mounting. Use them solely for providing support.

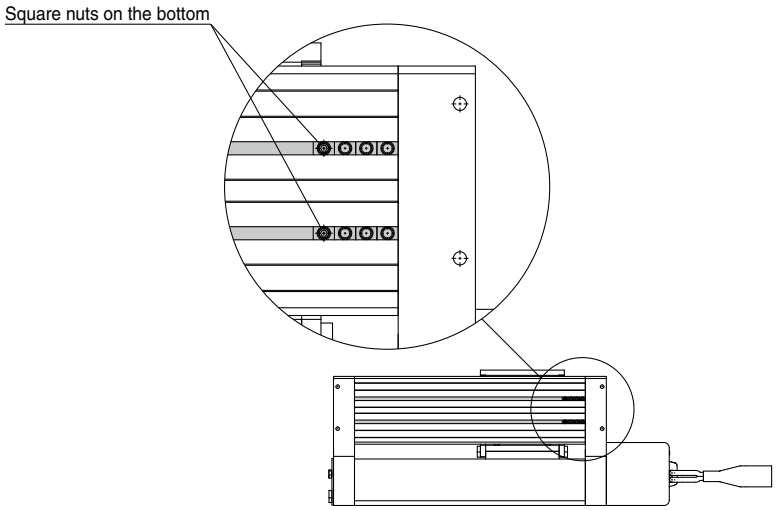

Incremental (Step Motor 24 VDC)

Low Profile Slider Type

Linear Guide Single Axis Type/Double Axis Type

LEMH/HT Series LEMH/LEMHT25, 32

* For details, refer to page 1343 and onward.

RoHS

⚠Caution

LEM series	LEM□25 / LEM□32	←	E-MY series	E-MY□16 / E-MY□25

How to Order

Linear guide single axis type	LEMH	25	□	T	–	300	□	–	S1
Linear guide double axis type	LEMHT	25	□	T	–	300	□	–	S1
		❶	❷	❸		❹	❺		❻

JXC□ Series **CD17T**

LEC□ Series **2N** ❼ **1** ❽ □ ❾

For details on controllers, refer to page 392.

❶ Size

25
32

❷ Motor mounting position

Nil	Top mounting
U	Bottom mounting
L	Symmetric, Top mounting
LU	Symmetric, Bottom mounting

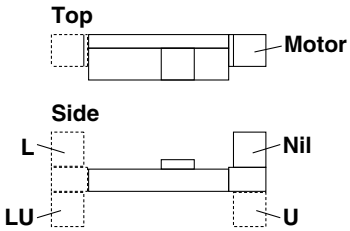

❸ Equivalent lead

T	48 mm

❹ Stroke*1 *2 [mm]

Stroke	None	
	Size	Applicable stroke
50 to 1000	25	50, 100, 150, 200, 250, 300, 350, 400, 450, 500, 550, 600, **700**, **800**, **900**, **1000**
50 to 1500	32	50, 100, 150, 200, 250, 300, 350, 400, 450, 500, 550, 600, **700**, **800**, **900**, **1000**, **1100**, **1200**, **1300**, **1400**, **1500**

❺ Motor option

Nil	Without option
B	With lock

❻ Actuator cable type/length*4

Standard cable [m]

Nil	None
S1	1.5
S3	3
S5	5

Robotic cable [m]

R1	1.5	RA	10*3
R3	3	RB	15*3
R5	5	RC	20*3
R8	8*3		

The stroke adjustment unit is built into the product.

For auto switches, refer to pages 406 to 408.

JXC□ Series (For details, refer to page 393.)

❼ Controller

Nil	Without controller
C□1□□	With controller

C D 1 7 T

Interface (Communication protocol/Input/Output)

Symbol	Type	Number of axes, Special specification: Standard	With STO sub-function
5	Parallel input (NPN)	●	
6	Parallel input (PNP)	●	
E	EtherCAT	●	●
9	EtherNet/IP™	●	●
P	PROFINET	●	●
D	DeviceNet®	●	
L	IO-Link	●	●
M	CC-Link	●	

Mounting

7	Screw mounting
8*7	DIN rail

Number of axes, Special specification

Symbol	Number of axes	Specification
1	Single axis	Standard
F	Single axis	With STO sub-function

Communication plug connector, I/O cable*8

Symbol	Type	Applicable interface
Nil	Without accessory	—
S	Straight type communication plug connector	DeviceNet® CC-Link Ver. 1.10
T	T-branch type communication plug connector	
1	I/O cable (1.5 m)	Parallel input (NPN) Parallel input (PNP)
3	I/O cable (3 m)	
5	I/O cable (5 m)	

LEC□ Series (For details, refer to page 393.)

2N 1 □

❼ ❽ ❾

❼ Controller type

Nil	Without controller	
2N	LECP2*5 (Programless type (With stroke study))	NPN
2P		PNP
1N	LECP1 (Programless type)	NPN
1P		PNP

❽ I/O cable length*6

Nil	Without cable (Without communication plug connector)
1	1.5 m
3	3 m
5	5 m

❾ Controller mounting

Nil	Screw mounting
D	DIN rail*7

*1 Please contact SMC as all non-standard and non-made-to-order strokes are produced as special orders.
*2 The strokes in bold are produced upon receipt of order.
*3 Produced upon receipt of order (Robotic cable only)
*4 The standard cable should only be used on fixed parts. For use on moving parts, select the robotic cable. Refer to page 1092 if only the actuator cable is required.
*5 Select the LECP2 when setting the stroke range using the stroke adjustment unit or an external stopper.
*6 When "Without controller" is selected for controller types, I/O cable length cannot be selected. Refer to page 1056 (For LECP2), or page 1047 (For LECP1) if I/O cable is required.
*7 The DIN rail is not included. It must be ordered separately.
*8 Select "Nil" for anything other than DeviceNet®, CC-Link, or parallel input. Select "Nil," "S," or "T" for DeviceNet® or CC-Link. Select "Nil," "1," "3," or "5" for parallel input.

⚠Caution

[CE/UKCA-compliant products]

① EMC compliance was tested by combining the electric actuator LEM series and the controller LEC/JXC series. The EMC depends on the configuration of the customer's control panel and the relationship with other electrical equipment and wiring. Therefore, compliance with the EMC directive cannot be certified for SMC components incorporated into the customer's equipment under actual operating conditions. As a result, it is necessary for the customer to verify compliance with the EMC directive for the machinery and equipment as a whole.

[UL-compliant products (For the LEC series)]

When compliance with UL is required, the electric actuator and controller/driver should be used with a UL1310 Class 2 power supply.

The actuator and controller/driver are sold as a package.

(They can be ordered separately.)

Confirm that the combination of the controller/driver and the actuator is correct.

<Check the following before use.>

① Check the actuator label for the model number. This number should match that of the controller/driver.

② Check that the Parallel I/O configuration matches (NPN or PNP).

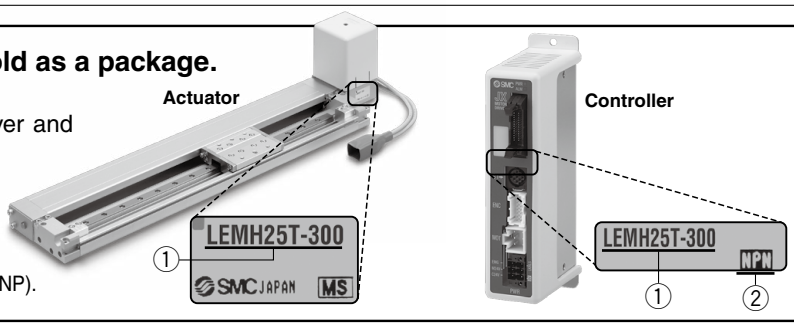

* Refer to the Operation Manual for using the products. Please download it via our website: https://www.smcworld.com

Compatible Controllers

Type	Step data input type	Programless type (With stroke study)	Programless type
			
Series	**JXC51 JXC61**	**LECP2**	**LECP1**
Features	Parallel I/O	End to end operation similar to an air cylinder using the stroke study function	Capable of setting up operation (step data) without using a PC or teaching box
Compatible motor	Step motor (Servo/24 VDC)		
Max. number of step data	64 points	14 points (2 stroke end points + 12 intermediate points)	14 points
Power supply voltage	24 VDC		
Reference page	1017	1051	1042

Type	EtherCAT direct input type	EtherCAT direct input type with STO sub-function	EtherNet/IP™ direct input type	EtherNet/IP™ direct input type with STO sub-function	PROFINET direct input type	PROFINET direct input type with STO sub-function	DeviceNet® direct input type	IO-Link direct input type	IO-Link direct input type with STO sub-function	CC-Link direct input type
										
Series	**JXCE1**	**JXCEF**	**JXC91**	**JXC9F**	**JXCP1**	**JXCPF**	**JXCD1**	**JXCL1**	**JXCLF**	**JXCM1**
Features	EtherCAT direct input	EtherCAT direct input with STO sub-function	EtherNet/IP™ direct input	EtherNet/IP™ direct input with STO sub-function	PROFINET direct input	PROFINET direct input with STO sub-function	DeviceNet® direct input	IO-Link direct input	IO-Link direct input with STO sub-function	CC-Link direct input
Compatible motor	Step motor (Servo/24 VDC)									
Max. number of step data	64 points									
Power supply voltage	24 VDC									
Reference page	1063									

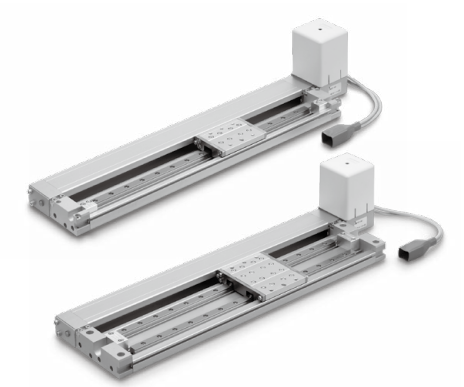

Speed/Acceleration (Set values for LECP1/2)

Table 1 Switch and Speed*1

Switch no.	Speed [mm/s]
0	48
1	75
2	100
3	150
4	200
5	300
6	400
7	500
8	600
9	800
10	1000
11	1200
12	1400
13	1600
14	1800
15	2000

Table 2 Switch and Acceleration*1

Switch no.	Acceleration [mm/s²]
0	250
1	500
2	1000
3	1500
4	2000
5	2500
6	3000
7	4000
8	5000
9	6000
10	7500
11	10000
12	12500
13	15000
14	17500
15	20000

*1 The factory default setting for the switch is No. 0.

Specifications

Step Motor (Servo/24 VDC)

Model			LEMH25/LEMHT25	LEMH32/LEMHT32
Stroke [mm]*1			50, 100, 150, 200, 250, 300, 350, 400, 450, 500, 550, 600, (700), (800), (900), (1000)	50, 100, 150, 200, 250, 300, 350, 400, 450, 500, 550, 600, (700), (800), (900), (1000), (1100), (1200), (1300), (1400), (1500)
Actuator specifications	Work load [kg]*2	Horizontal	10	20
	Speed [mm/s]*2		48 to 2000 (Refer to Table 1 for set values when LECP1 or 2 is selected.)	
	Max. acceleration/deceleration [mm/s²]*7		20000 (Depends on the work load.)(Refer to Table 2 for set values when LECP1 or 2 is selected.)	
	Positioning repeatability [mm]		±0.08	
	Lost motion [mm]*8		0.1 or less	
	Lead [mm]		48	
	Actuation type		Belt	
	Guide type		Linear guide	
	Static allowable moment*9 (For LEMH) [N·m]	Mep (Pitching)	7	28
		Mey (Yawing)	7	26
		Mer (Rolling)	6	26
	Static allowable moment*9 (For LEMHT) [N·m]	Mep (Pitching)	46	100
		Mey (Yawing)	46	100
		Mer (Rolling)	55	120
	Operating temperature range [°C]		5 to 40	
	Operating humidity range [%RH]		90 or less (No condensation)	
	Enclosure		IP10	
	Allowable external force [N]*6		10	20
Electric specifications	Motor size		□56.4	
	Motor type		Step motor (Servo/24 VDC)	
	Encoder		Incremental	
	Power supply voltage [V]		24 VDC ±10%	
	Power [W]*3 *5		Max. power 123	Max. power 127
Lock unit specifications	Type*4		Non-magnetizing lock	
	Holding force [N]		36	
	Power consumption [W]*5		5	
	Rated voltage [V]		24 VDC ±10%	

*1 Please contact SMC as all non-standard and non-made-to-order strokes are produced as special orders.
*2 Speed changes according to the work load.
Check the "Speed–Work Load Graph (Guide)" on page 365.
The work load changes according to the work load mounting condition. Check the "Dynamic Allowable Moment" on pages 368 and 369.
Furthermore, if the cable length exceeds 5 m, then it will decrease by up to 10% for each 5 m.
*3 Indicates the max. power during operation (including the controller)
This value can be used for the selection of the power supply.
*4 With lock only
*5 For an actuator with lock, add the power consumption for the lock.
*6 The resistance value of the attached equipment should be within the allowable external resistance value.
*7 Maximum acceleration and deceleration are limited by the work load and the stroke. Refer to the "Work Load–Acceleration/Deceleration Graph (Guide)" on page 366.
*8 A reference value for correcting errors in reciprocal operation
*9 The static allowable moment is the amount of static moment which can be applied to the actuator when it is stopped.
If the product is exposed to impact or repeated load, be sure to take adequate safety measures when using the product.

Weight

Linear Guide Single Axis Type

Stroke		50	100	150	200	250	300	350	400	450	500	550	600	(700)	(800)	(900)	(1000)	(1100)	(1200)	(1300)	(1400)	(1500)
Product weight [kg]	LEMH25	1.91	2.05	2.18	2.32	2.46	2.59	2.73	2.87	3.00	3.14	3.28	3.42	3.69	3.96	4.24	4.51	—	—	—	—	—
	LEMH32	3.47	3.70	3.93	4.17	4.40	4.63	4.87	5.10	5.33	5.57	5.80	6.03	6.50	6.97	7.44	7.90	8.37	8.84	9.30	9.77	10.24
Additional weight with lock [kg]		0.60																				

Linear Guide Double Axis Type

Stroke		50	100	150	200	250	300	350	400	450	500	550	600	(700)	(800)	(900)	(1000)	(1100)	(1200)	(1300)	(1400)	(1500)
Product weight [kg]	LEMHT25	2.40	2.61	2.82	3.03	3.24	3.45	3.66	3.87	4.08	4.29	4.50	4.71	5.13	5.55	5.97	6.38	—	—	—	—	—
	LEMHT32	4.82	5.20	5.58	5.97	6.35	6.73	7.12	7.50	7.88	8.27	8.65	9.04	9.80	10.57	11.34	12.10	12.87	13.64	14.41	15.17	15.94
Additional weight with lock [kg]		0.60																				

Construction

LEMH

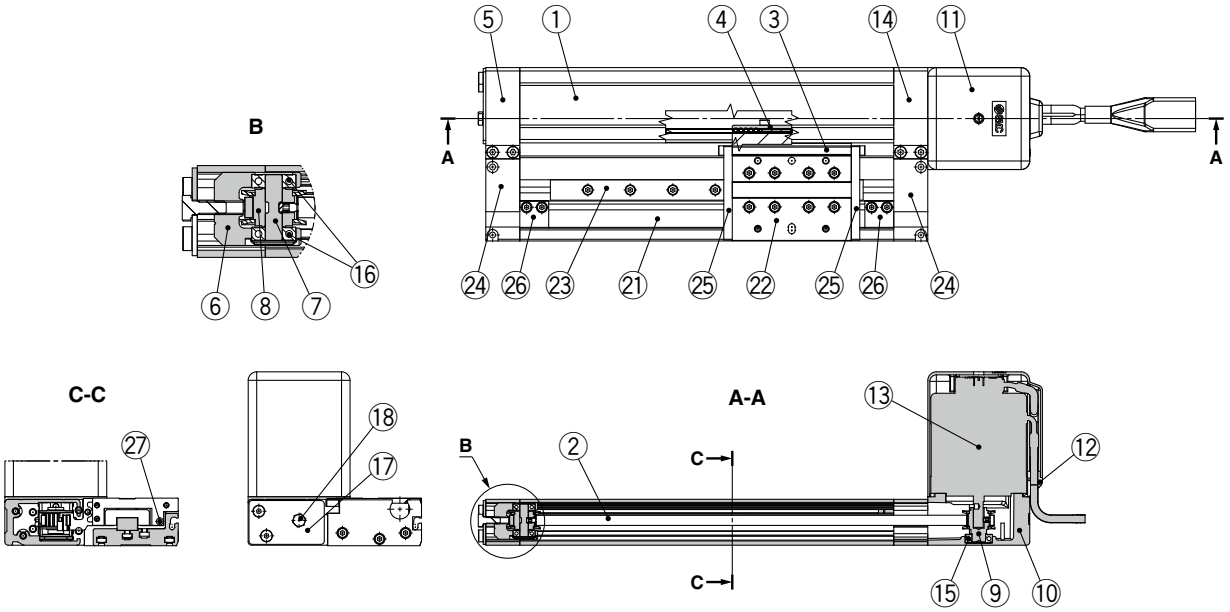

Motor option: With lock

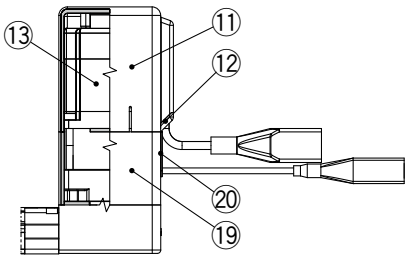

Component Parts

No.	Description	Material	Note
1	**Body**	Aluminum alloy	Anodized
2	**Belt**	—	
3	**L-type bracket**	Aluminum alloy	Anodized
4	**Belt stopper**	Aluminum alloy	
5	**End block**	Aluminum alloy	Anodized
6	**Pulley holder**	Aluminum alloy	
7	**Pulley shaft**	Stainless steel	Heat treatment + Special treatment
8	**Pulley**	Aluminum alloy	Anodized
9	**Motor pulley**	Aluminum alloy	Anodized
10	**Motor mount**	Aluminum die-casted	Painting
11	**Motor cover**	Synthetic resin	
12	**Grommet**	Synthetic resin	
13	**Motor**	—	
14	**Motor end block**	Aluminum alloy	Anodized
15	**Bearing**	—	
16	**Bearing**	—	
17	**Tension plate**	Aluminum alloy	Anodized

Component Parts

No.	Description	Material	Note
18	**Hexagon bolt**	Carbon steel	Chromating
19	**Motor cover for lock**	Aluminum alloy	Anodized Only “with lock”
20	**Grommet**	CR	Chloroprene rubber Only “with lock”
21	**Guide unit body**	Aluminum alloy	Anodized
22	**Slide table**	Aluminum alloy	Anodized
23	**Guide**	—	
24	**End plate**	Aluminum alloy	Anodized
25	**Stopper**	Carbon steel	Nickel plating
26	**Stroke adjuster**	Aluminum alloy	Anodized
27	**Magnet**	—	

Replacement Parts/Grease Pack

Applied portion	Order no.
Guide unit	GR-S-010 (10 g) GR-S-020 (20 g)

Construction

LEMHT

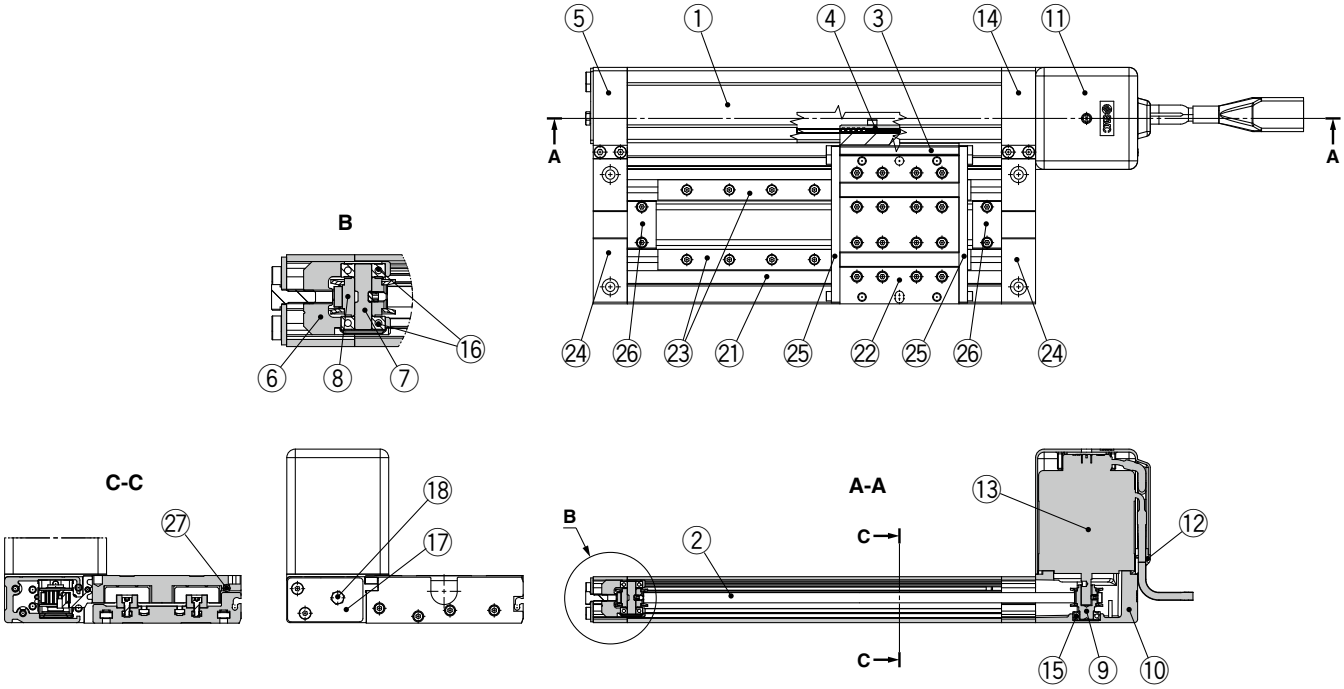

Motor option: With lock

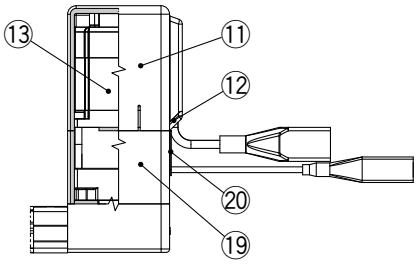

Component Parts

No.	Description	Material	Note
1	**Body**	Aluminum alloy	Anodized
2	**Belt**	—	
3	**L-type bracket**	Aluminum alloy	Anodized
4	**Belt stopper**	Aluminum alloy	
5	**End block**	Aluminum alloy	Anodized
6	**Pulley holder**	Aluminum alloy	
7	**Pulley shaft**	Stainless steel	Heat treatment + Special treatment
8	**Pulley**	Aluminum alloy	Anodized
9	**Motor pulley**	Aluminum alloy	Anodized
10	**Motor mount**	Aluminum die-casted	Painting
11	**Motor cover**	Synthetic resin	
12	**Grommet**	Synthetic resin	
13	**Motor**	—	
14	**Motor end block**	Aluminum alloy	Anodized
15	**Bearing**	—	
16	**Bearing**	—	
17	**Tension plate**	Aluminum alloy	Anodized

Component Parts

No.	Description	Material	Note
18	**Hexagon bolt**	Carbon steel	Chromating
19	**Motor cover for lock**	Aluminum alloy	Anodized Only “with lock”
20	**Grommet**	CR	Chloroprene rubber Only “with lock”
21	**Guide unit body**	Aluminum alloy	Anodized
22	**Slide table**	Aluminum alloy	Anodized
23	**Guide**	—	
24	**End plate**	Aluminum alloy	Anodized
25	**Stopper**	Carbon steel	Nickel plating
26	**Stroke adjuster**	Aluminum alloy	Anodized
27	**Magnet**	—	

Replacement Parts/Grease Pack

Applied portion	Order no.
Guide unit	GR-S-010 (10 g) GR-S-020 (20 g)

Dimensions: Linear Guide Single Axis Type Size 25

Refer to page 994 and after for dimensions of the controllers.

Top mounting
LEMH25T-□-□□□□□

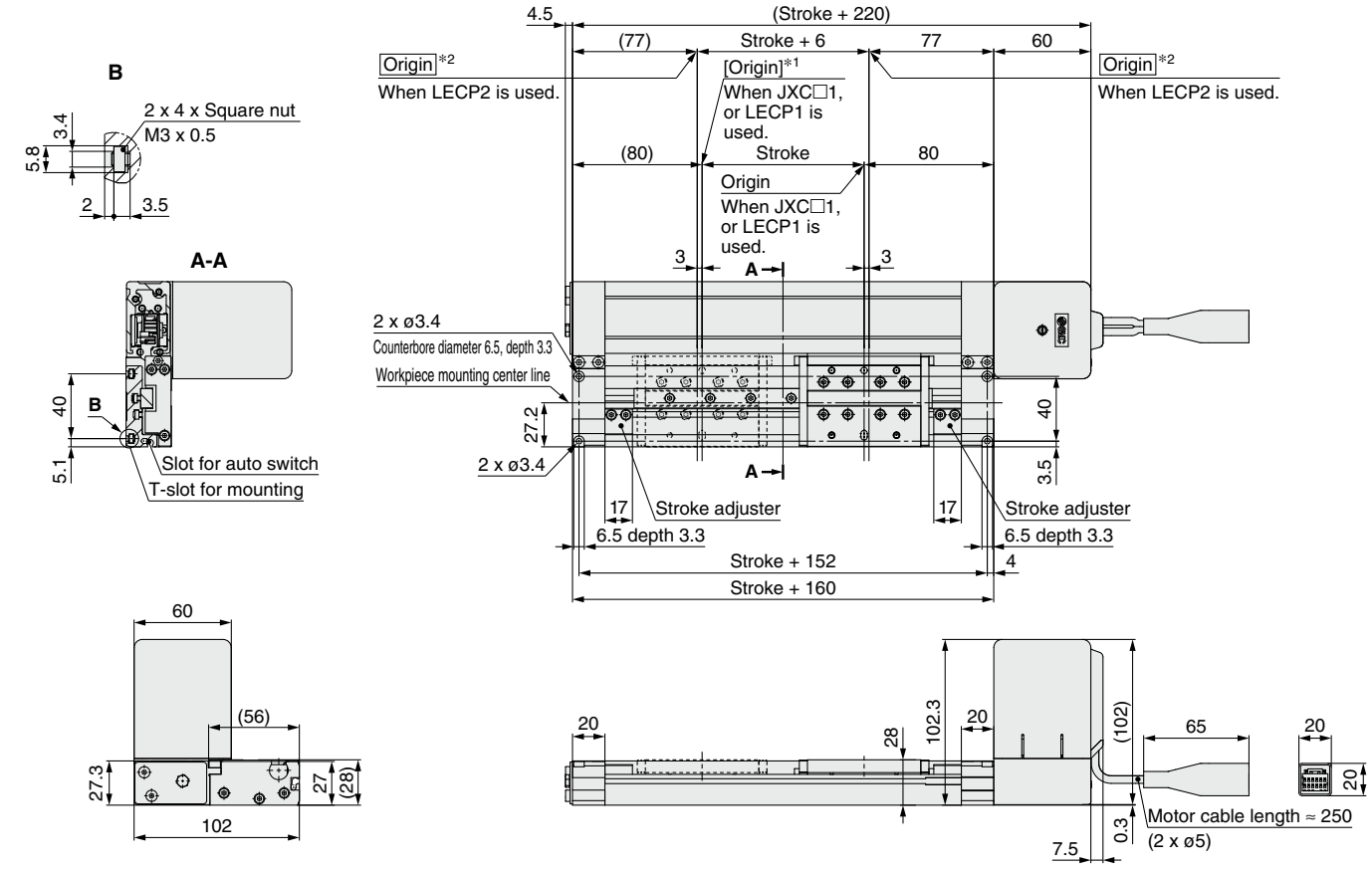

*1 [ ] for when the direction of return to origin has changed (When the JXC□1, or LECP1 is used.)
*2 Origin for when the LECP2 is used. The movable stroke is "Stroke + 6 mm."

Top mounting
With lock
LEMH25T-□B-□□□□□

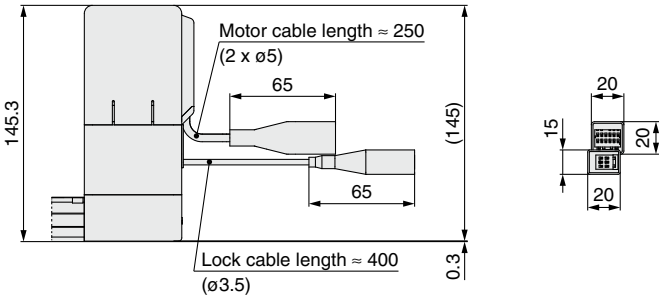

Bottom mounting
With lock
LEMH25UT-□B-□□□□□

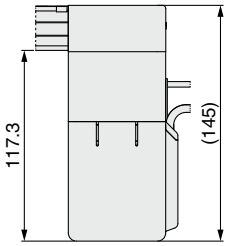

Bottom mounting
LEMH25UT-□-□□□□□

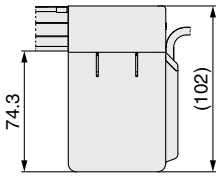

Table details

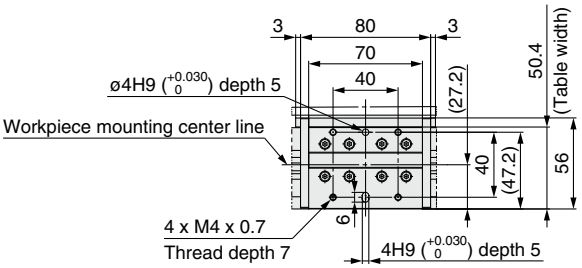

Dimensions: Linear Guide Single Axis Type Size 25

Refer to page 994 and after for dimensions of the controllers.

Symmetric/Top mounting
LEMH25LT-□-□□□□□

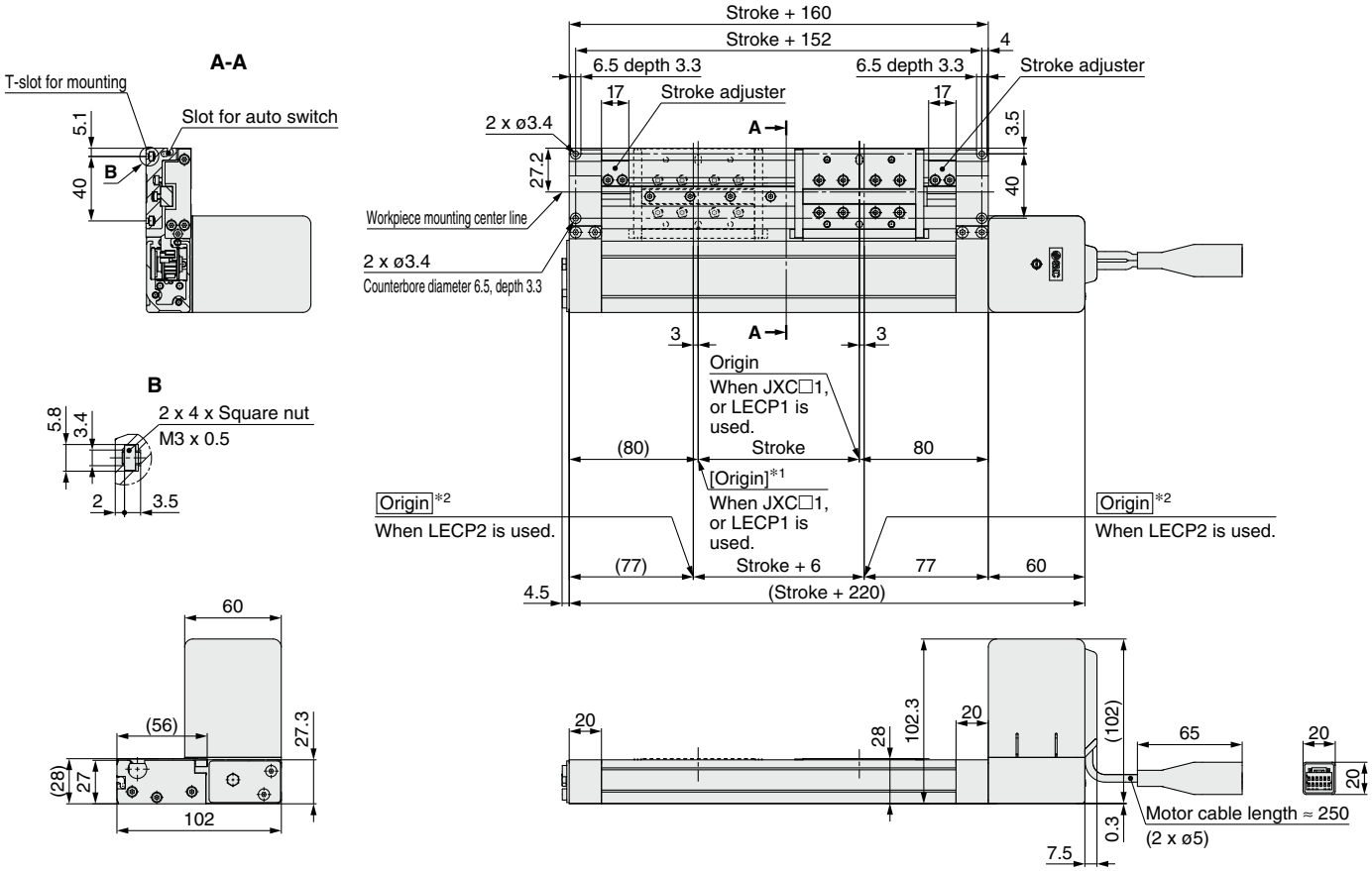

*1 [ ] for when the direction of return to origin has changed (When the JXC□1, or LECP1 is used.)
*2 Origin for when the LECP2 is used. The movable stroke is "Stroke + 6 mm."

Top mounting
With lock
LEMH25LT-□B-□□□□□

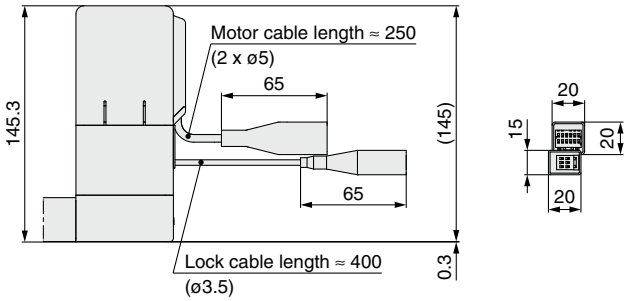

Bottom mounting
With lock
LEMH25LUT-□B-□□□□□

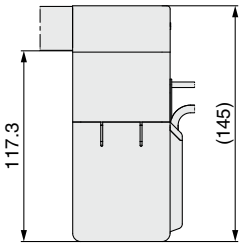

Bottom mounting
LEMH25LUT-□-□□□□□

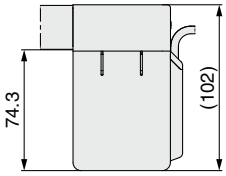

Table details

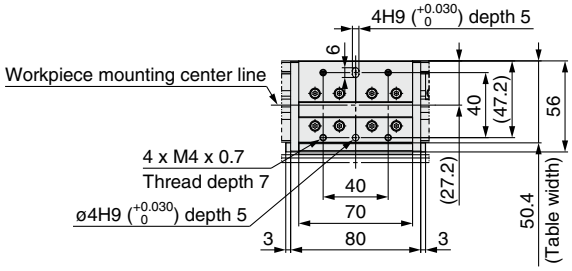

Dimensions: Linear Guide Single Axis Type Size 32

Refer to page 994 and after for dimensions of the controllers.

Top mounting
LEMH32T-□-□□□□□

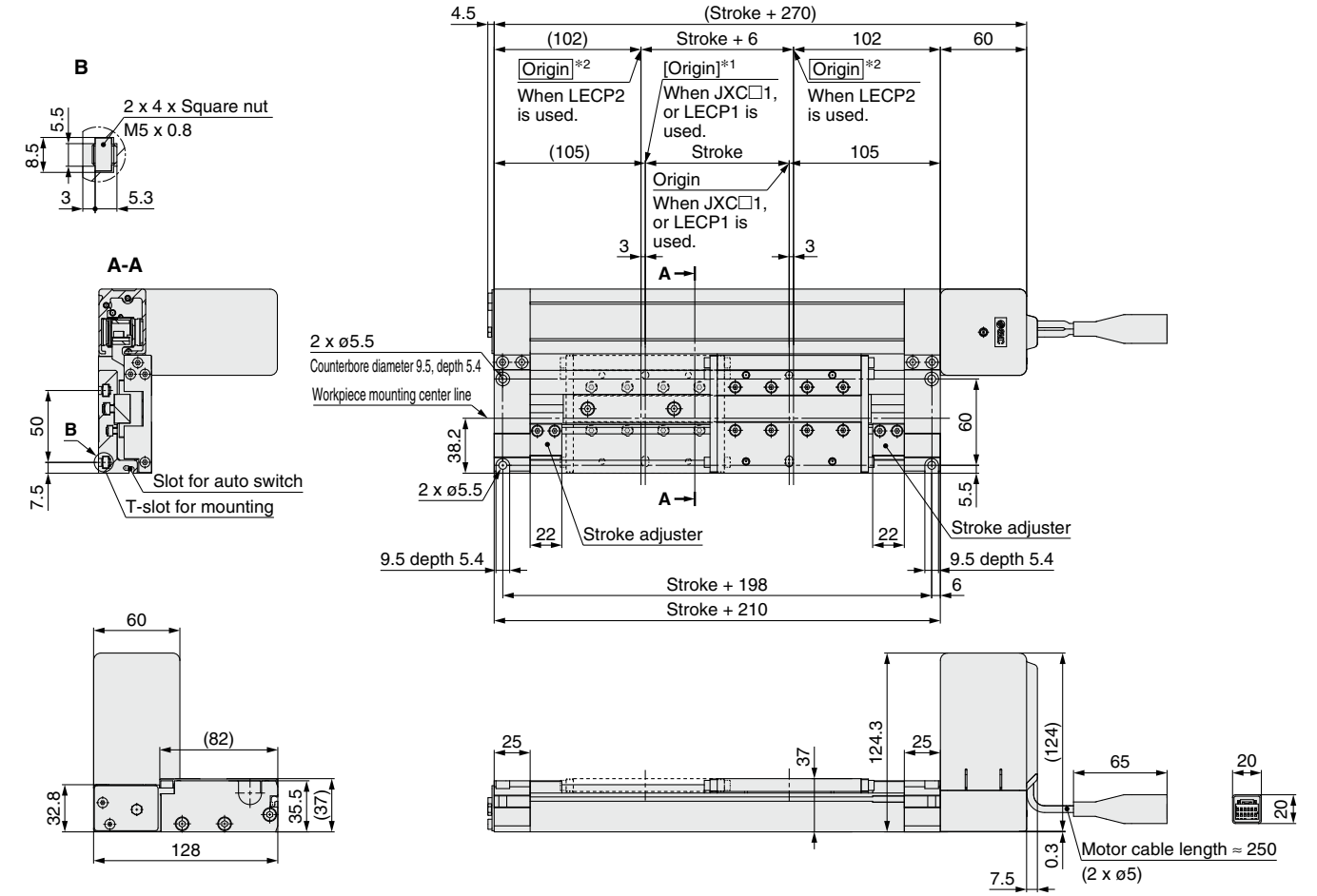

*1 [ ] for when the direction of return to origin has changed (When the JXC□1, or LECP1 is used.)
*2 Origin for when the LECP2 is used. The movable stroke is "Stroke + 6 mm."

Top mounting
With lock
LEMH32T-□B-□□□□□

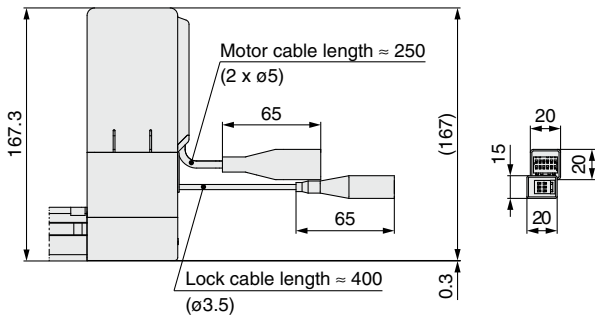

Bottom mounting
With lock
LEMH32UT-□B-□□□□□

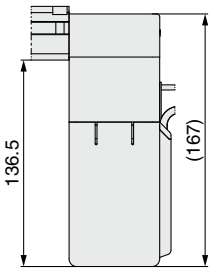

Bottom mounting
LEMH32UT-□-□□□□□

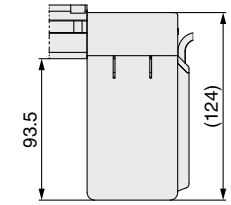

Table details

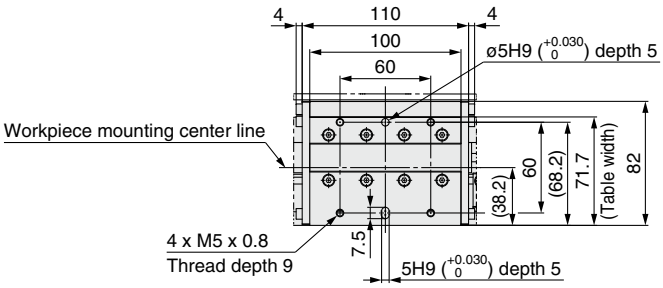

Dimensions: Linear Guide Single Axis Type Size 32

Refer to page 994 and after for dimensions of the controllers.

Symmetric/Top mounting

LEMH32LT-□-□□□□□

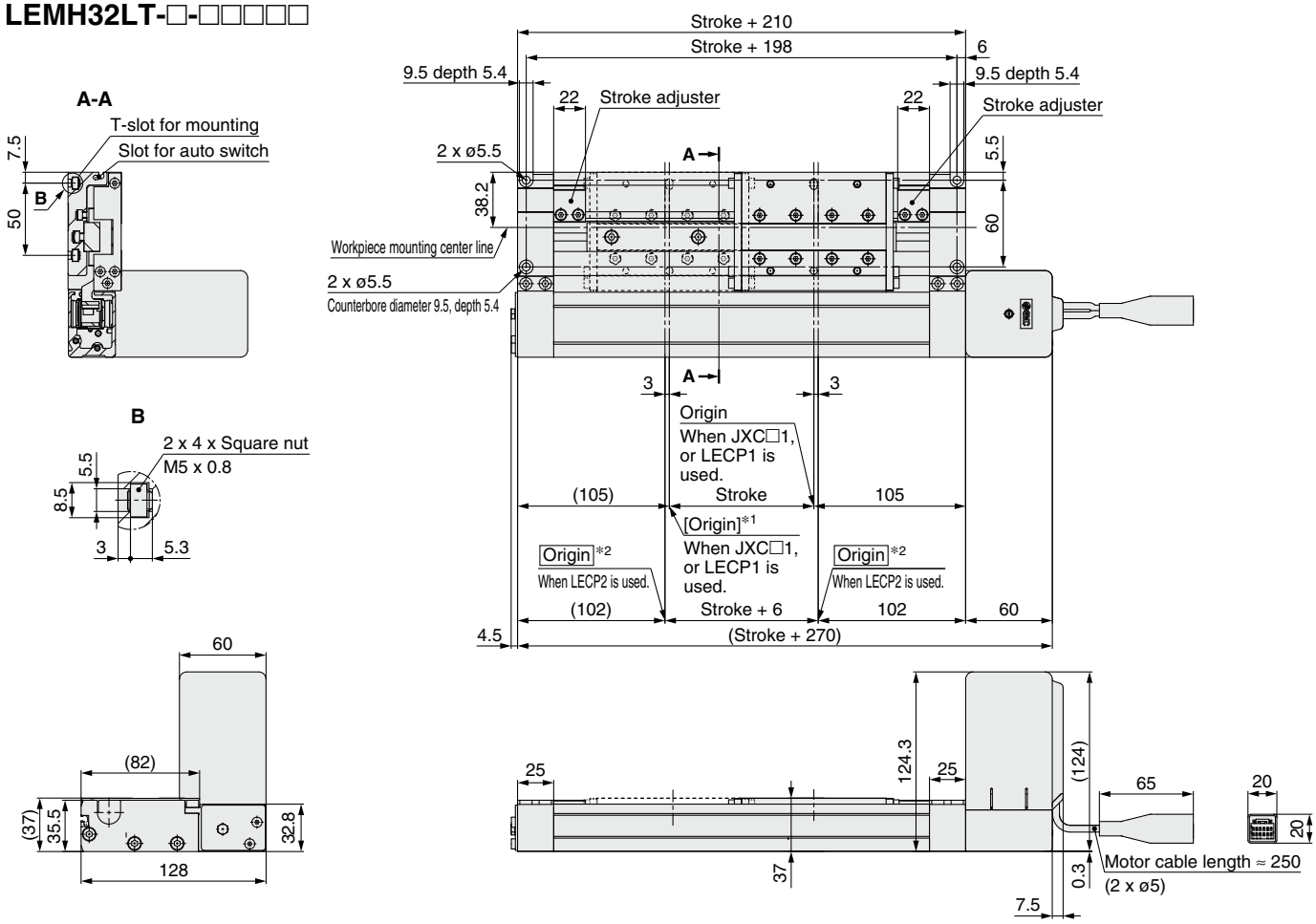

*1 [ ] for when the direction of return to origin has changed (When the JXC□1, or LECP1 is used.)
*2 Origin for when the LECP2 is used. The movable stroke is "Stroke + 6 mm."

Top mounting

With lock

LEMH32LT-□B-□□□□□

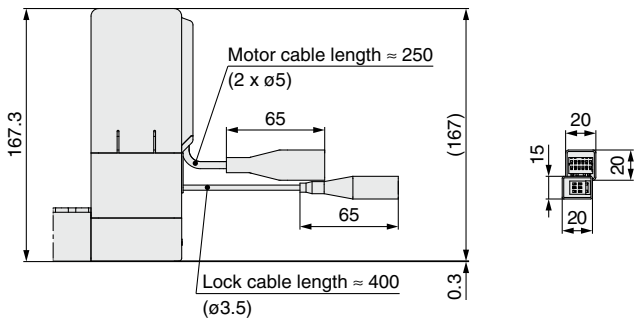

Bottom mounting

With lock

LEMH32LUT-□B-□□□□□

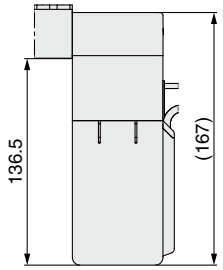

Bottom mounting

LEMH32LUT-□-□□□□□

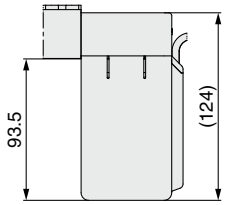

Table details

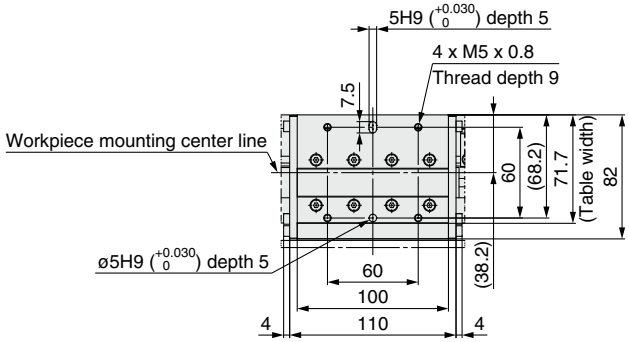

Dimensions: Linear Guide Double Axis Type Size 25

Refer to page 994 and after for dimensions of the controllers.

Top mounting
LEMHT25T-□-□□□□□

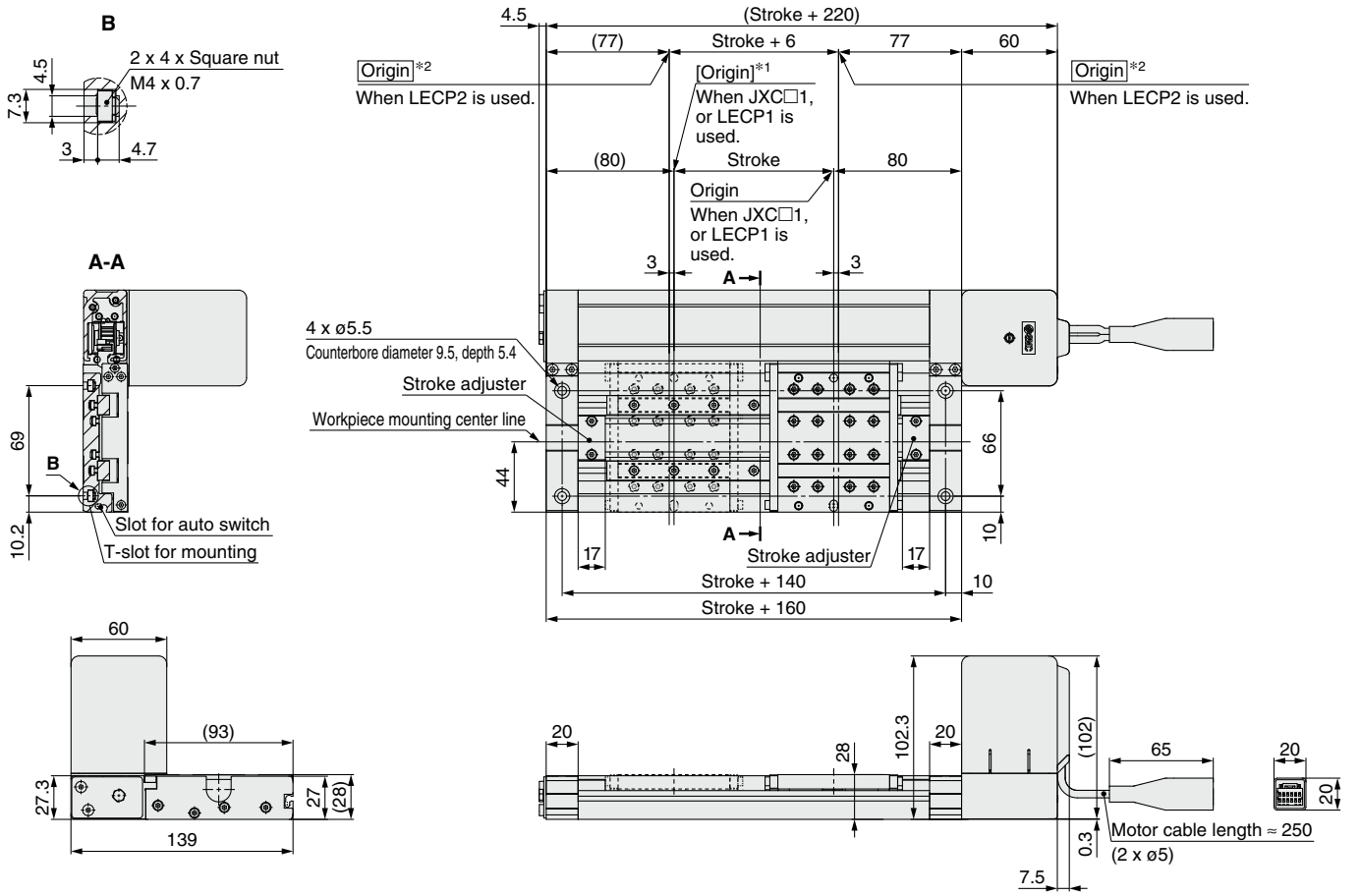

*1 [ ] for when the direction of return to origin has changed (When the JXC□1, or LECP1 is used.)
*2 Origin for when the LECP2 is used. The movable stroke is "Stroke + 6 mm."

Top mounting
With lock
LEMHT25T-□B-□□□□□

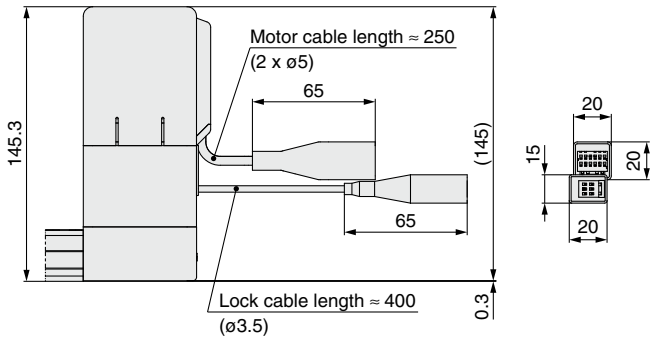

Bottom mounting
With lock
LEMHT25UT-□B-□□□□□

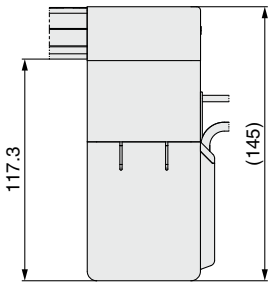

Bottom mounting
LEMHT25UT-□-□□□□□

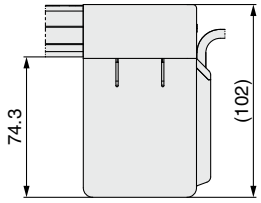

Table details

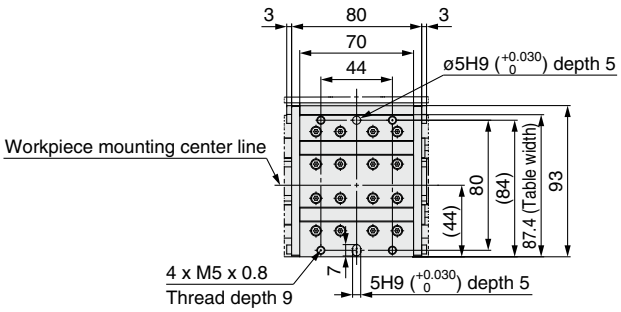

Dimensions: Linear Guide Double Axis Type Size 25

Refer to page 994 and after for dimensions of the controllers.

Symmetric/Top mounting

LEMHT25LT-□-□□□□□

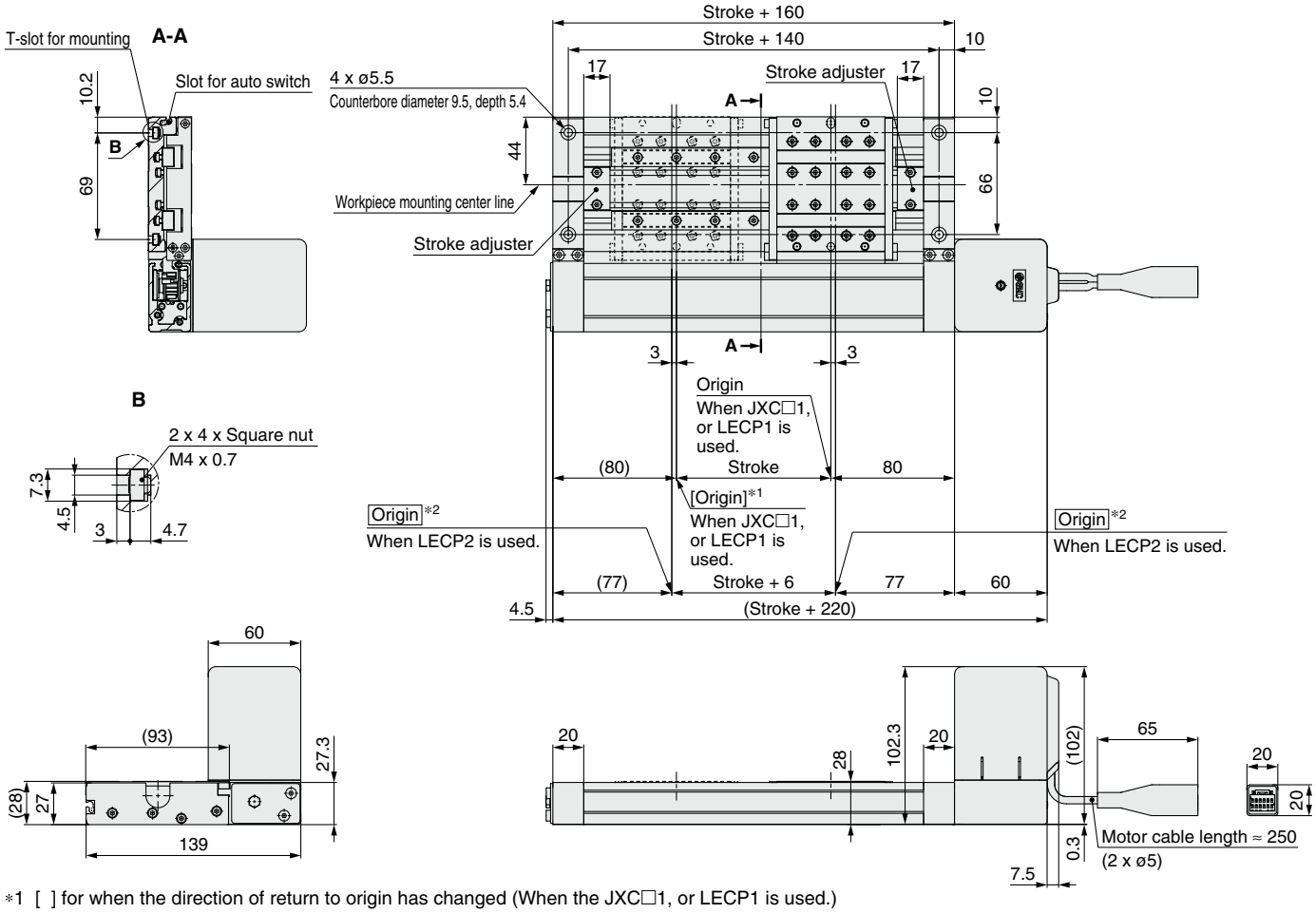

*1 [ ] for when the direction of return to origin has changed (When the JXC□1, or LECP1 is used.)
*2 Origin for when the LECP2 is used. The movable stroke is "Stroke + 6 mm."

Top mounting

With lock

LEMHT25LT-□B-□□□□□

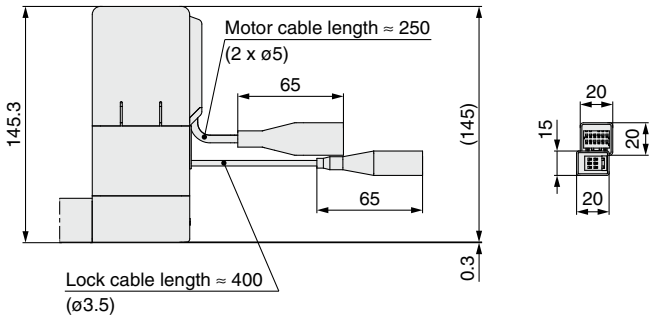

Bottom mounting

With lock

LEMHT25LUT-□B-□□□□□

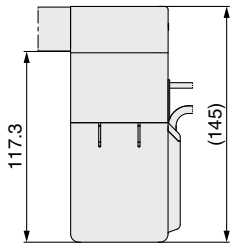

Bottom mounting

LEMHT25LUT-□-□□□□□

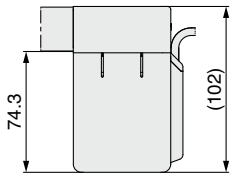

Table details

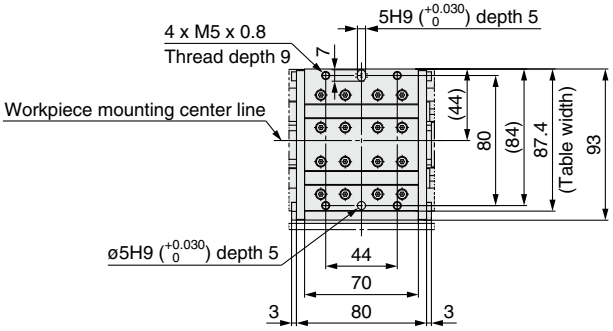

Dimensions: Linear Guide Double Axis Type Size 32

Refer to page 994 and after for dimensions of the controllers.

Top mounting
LEMHT32T-□-□□□□□

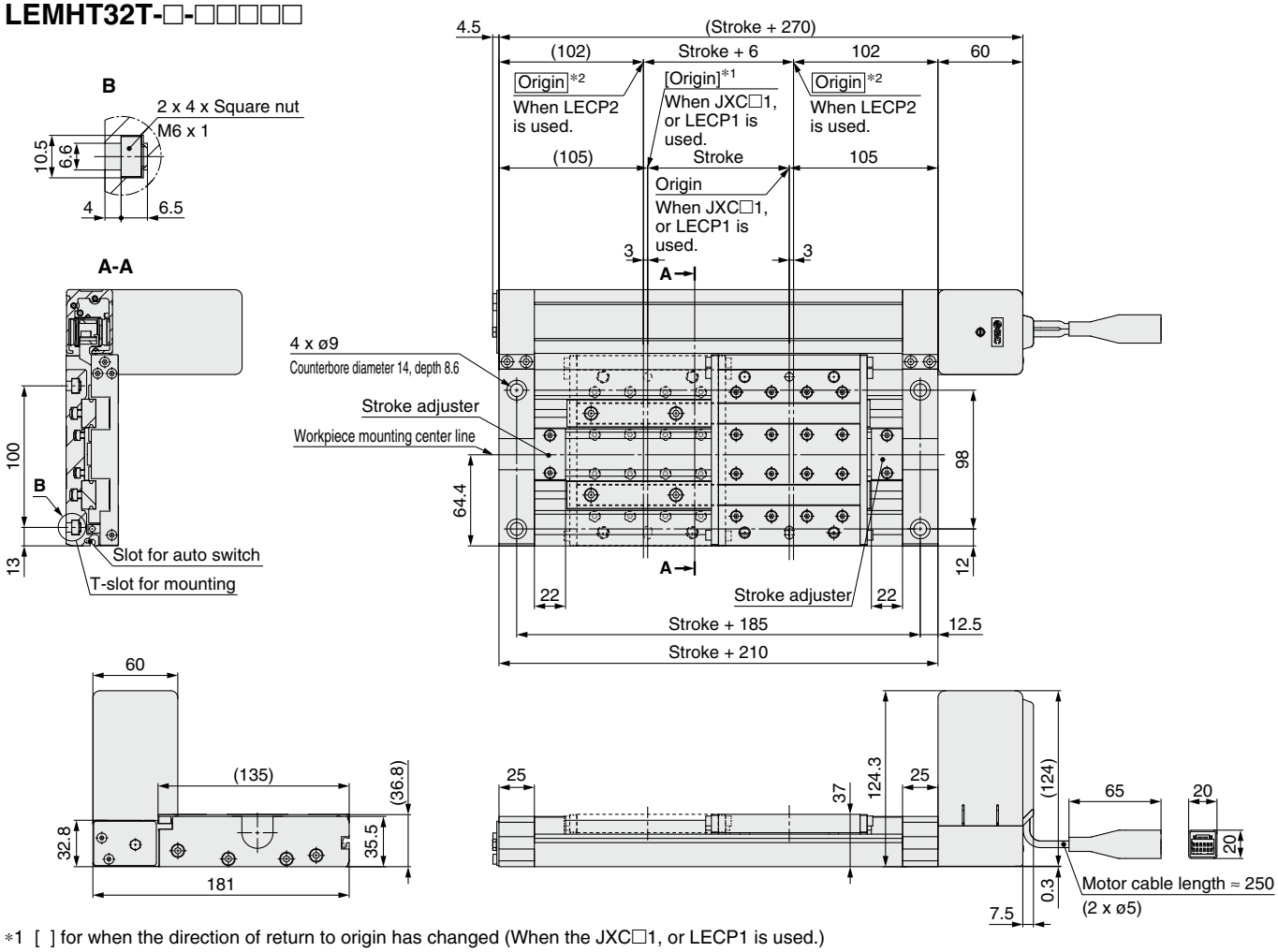

*1 [ ] for when the direction of return to origin has changed (When the JXC□1, or LECP1 is used.)
*2 Origin for when the LECP2 is used. The movable stroke is "Stroke + 6 mm."

Top mounting
With lock
LEMHT32T-□B-□□□□□

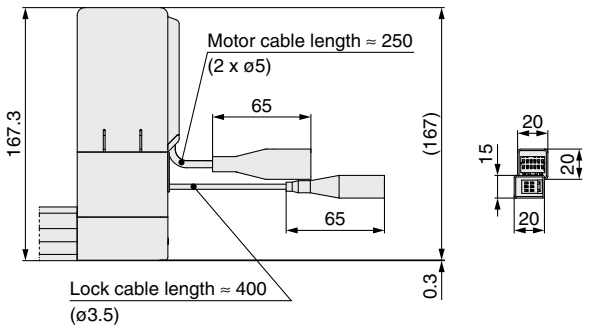

Bottom mounting
With lock
LEMHT32UT-□B-□□□□□

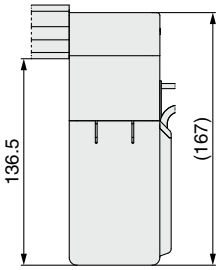

Bottom mounting
LEMHT32UT-□-□□□□□

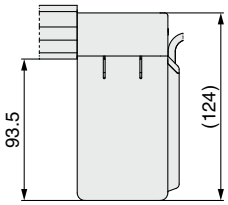

Table details

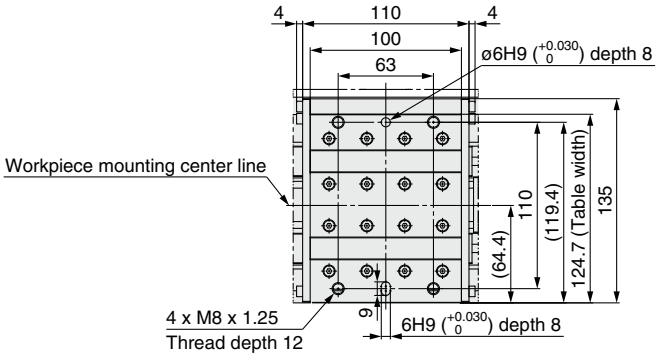

Dimensions: Linear Guide Double Axis Type Size 32

Refer to page 994 and after for dimensions of the controllers.

Symmetric/Top mounting

LEMHT32LT-□-□□□□□

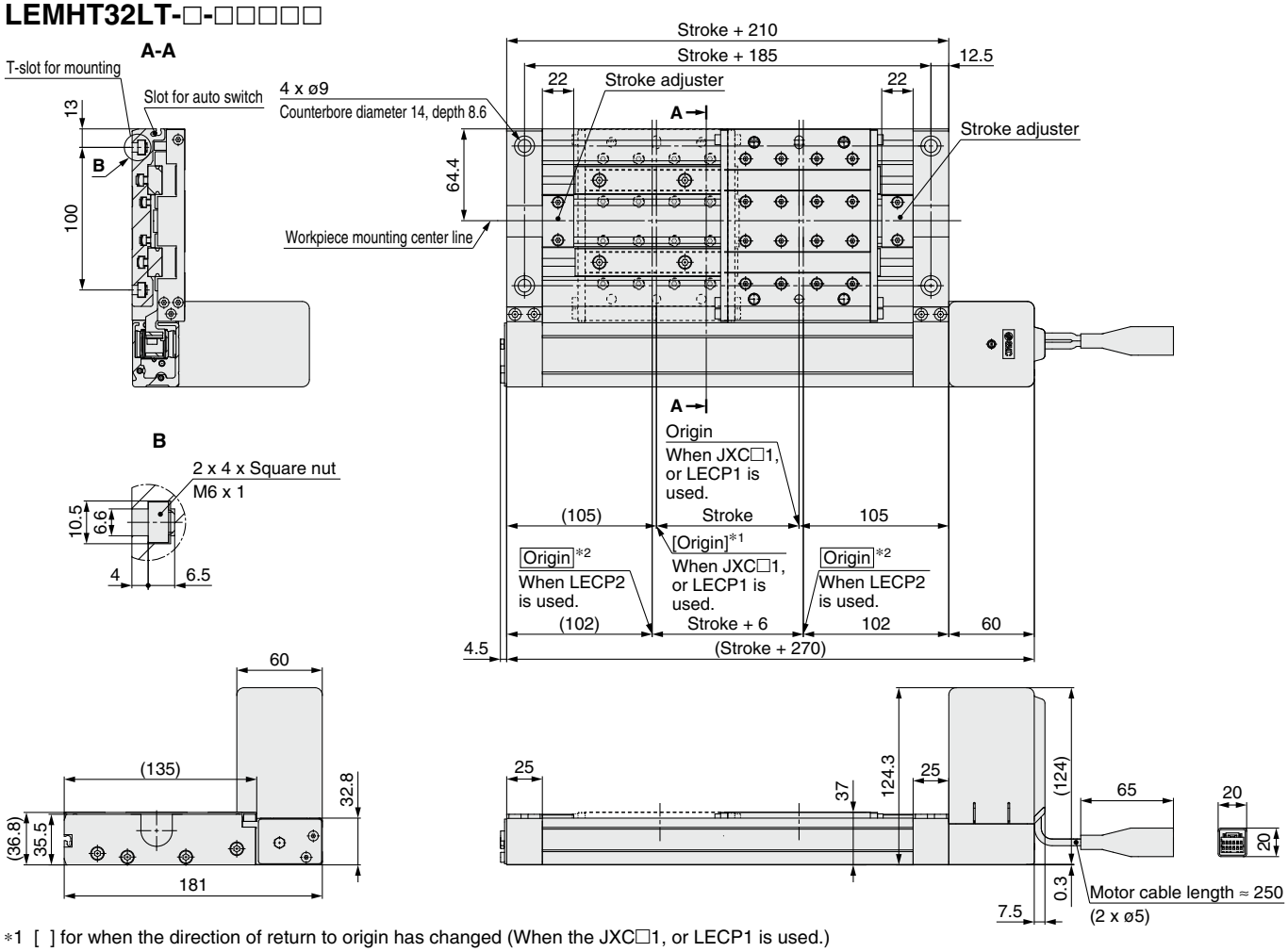

*1 [ ] for when the direction of return to origin has changed (When the JXC□1, or LECP1 is used.)
*2 Origin for when the LECP2 is used. The movable stroke is "Stroke + 6 mm."

Top mounting

With lock

LEMHT32LT-□B-□□□□□

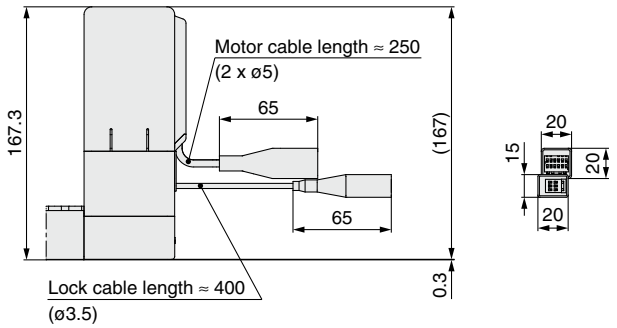

Bottom mounting

With lock

LEMHT32LUT-□B-□□□□□

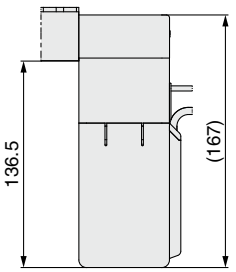

Bottom mounting

LEMHT32LUT-□-□□□□□

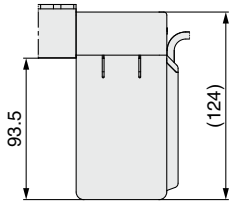

Table details

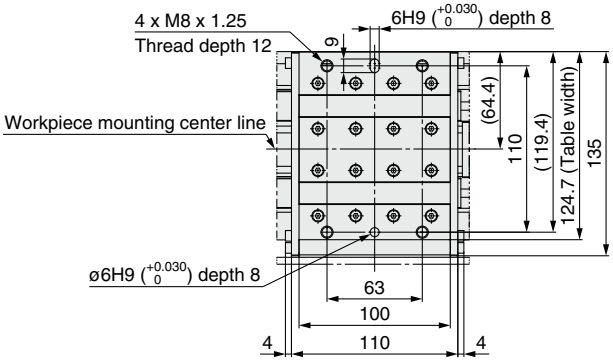

Usage Guide for Intermediate Supports

When using an actuator with a longer stroke, implement intermediate support to prevent frame deflection or deflection caused by vibration or external impacts. The spacing (**L**) of the intermediate supports must be no more than the values shown in the following graph.

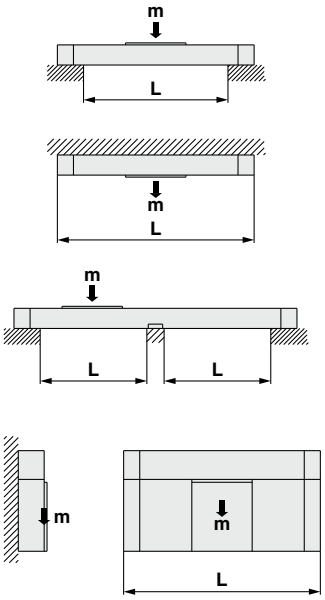

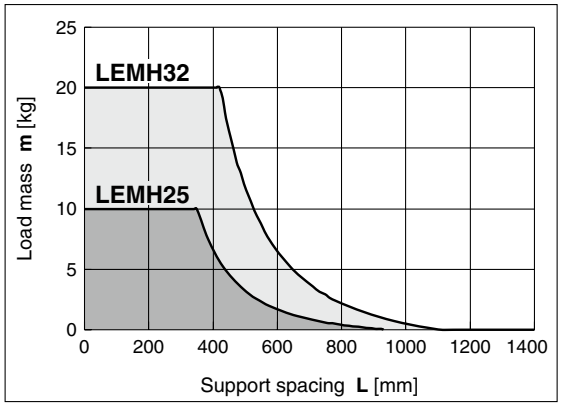

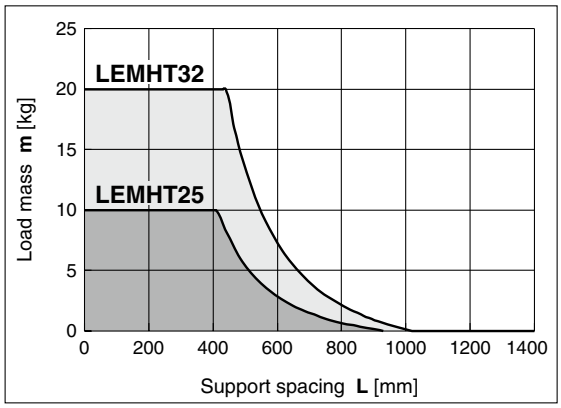

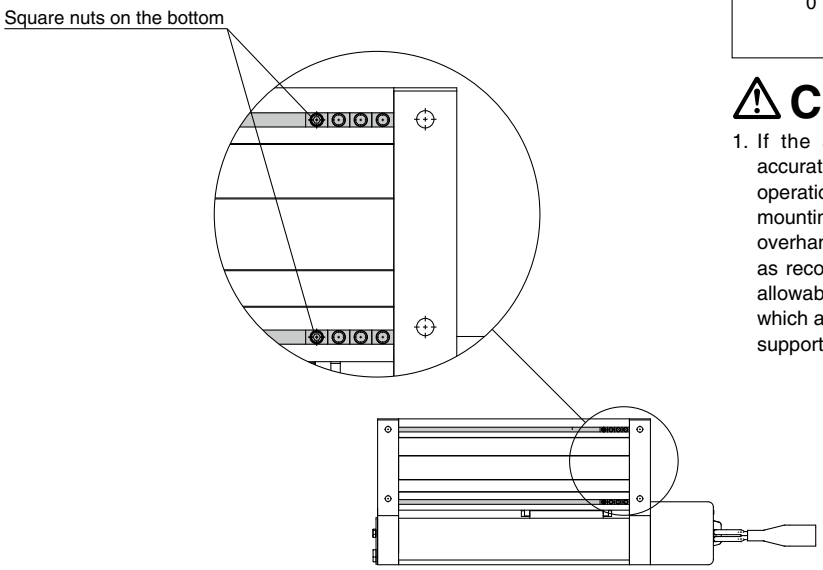

⚠ Caution

1. If the actuator mounting surfaces are not measured accurately, using the intermediate support may cause poor operation. Make sure to level the mounting surface when mounting the actuator. For long stroke operation involving overhang of the workpiece, implement intermediate support as recommended even if the support spacing is within the allowable limits shown in the graph. Use the square nuts which are on the bottom of the actuator for the intermediate support.

Auto Switch Mounting

Auto Switch Proper Mounting Position at Stroke End Detection

For LEMB

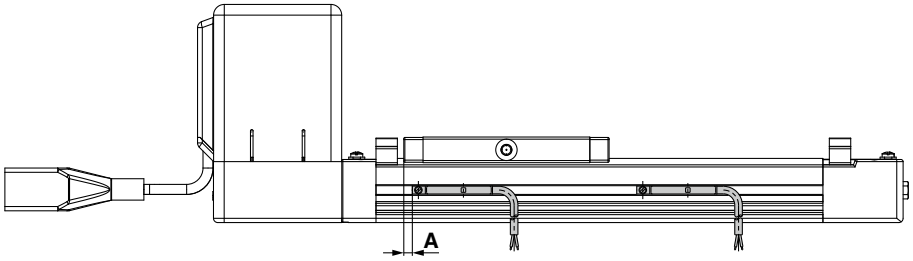

D-M9, D-M9□V
D-M9□W, D-M9□WV [mm]

Model	Nominal size	A	Operating range
LEMB	**25**	40	5.5
LEMC		8	3.5
LEMH		10	6
LEMHT		34	7
LEMB	**32**	40	5.5
LEMC		8.4	4
LEMH			5.5
LEMHT			5.5

∗ The operating range is a guideline including hysteresis, not meant to be guaranteed. There may be large variations (as much as ±30%) depending on the ambient environment.

For LEMC/H/HT The proper mounting position at stroke end detection (A dimension) changes depending on the motor mounting position (standard or symmetric).

Motor mounting position: Standard

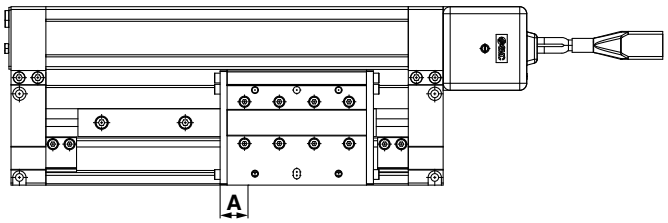

Motor mounting position: Symmetric

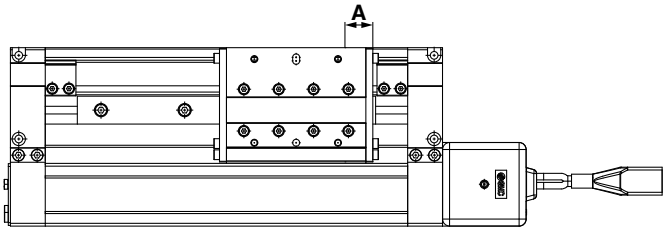

Auto Switch Mounting

LEMB Series

When mounting an auto switch, first, hold a switch spacer between your fingers and press it into the slot. When doing this, confirm that it is set in the correct mounting orientation, or reattach it if necessary. Next, insert an auto switch into the slot and slide it until it is positioned under the switch spacer. After establishing the mounting position, use a flat head watchmaker's screwdriver to tighten the included auto switch mounting screw.

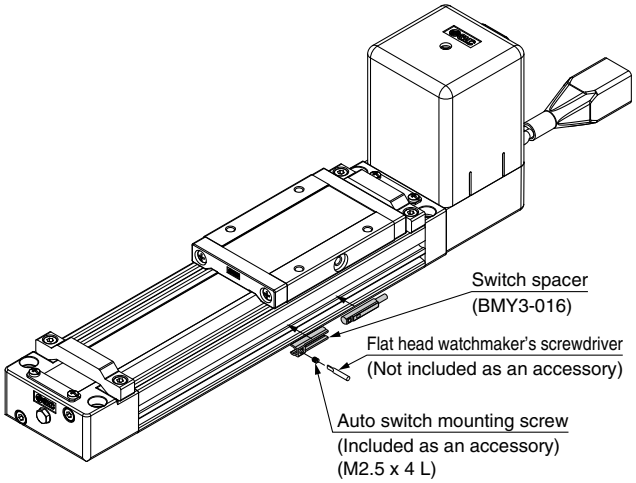

∗ When tightening the auto switch mounting screw, use a watchmaker's screwdriver with a handle of approximately 5 to 6 mm in diameter. Also, tighten with a torque of about 0.05 to 0.1 N·m. As a guide, turn about 90° past the point at which tightening can first be felt.

Switch Spacer Part No.

Applicable bore size [mm]	25	32
Switch spacer part no.	BMY3-016	

LEMC/H/HT Series

When mounting an auto switch, insert the auto switch into the actuator's auto switch mounting slot as shown below. Once in the mounting position, use a flat head watchmaker's screwdriver to tighten the included auto switch mounting screw.

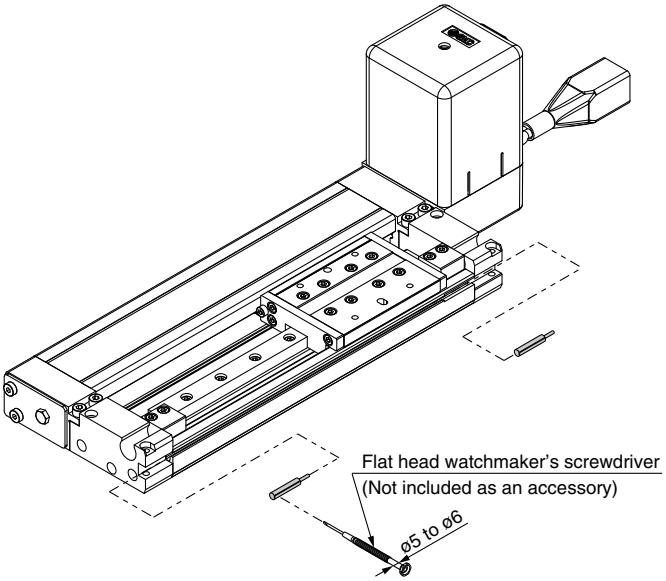

∗ When tightening the auto switch mounting screw (included with auto switch), use a watchmaker's screwdriver with a handle of approximately 5 to 6 mm in diameter.

Tightening Torque for Auto Switch Mounting Screw [N·m]

Auto switch model	Tightening torque
D-M9□(V) **D-M9□W(V)**	0.10 to 0.15

Solid State Auto Switch Direct Mounting Type
D-M9N(V)/D-M9P(V)/D-M9B(V)

Refer to the SMC website for details on products that are compliant with international standards.

Grommet

- **2-wire load current is reduced (2.5 to 40 mA).**
- **Using flexible cable as standard spec.**

⚠Caution

Precautions

Fix the auto switch with the existing screw installed on the auto switch body. The auto switch may be damaged if a screw other than the one supplied is used.

Auto Switch Specifications

PLC: Programmable Logic Controller

D-M9□, D-M9□V (With indicator light)						
Auto switch model	D-M9N	D-M9NV	D-M9P	D-M9PV	D-M9B	D-M9BV
Electrical entry direction	In-line	Perpendicular	In-line	Perpendicular	In-line	Perpendicular
Wiring type	3-wire				2-wire	
Output type	NPN		PNP		—	
Applicable load	IC circuit, Relay, PLC				24 VDC relay, PLC	
Power supply voltage	5, 12, 24 VDC (4.5 to 28 V)				—	
Current consumption	10 mA or less				—	
Load voltage	28 VDC or less		—		24 VDC (10 to 28 VDC)	
Load current	40 mA or less				2.5 to 40 mA	
Internal voltage drop	0.8 V or less at 10 mA (2 V or less at 40 mA)				4 V or less	
Leakage current	100 μA or less at 24 VDC				0.8 mA or less	
Indicator light	Red LED illuminates when turned ON.					
Standard	CE/UKCA marking					

Oilproof Flexible Heavy-duty Lead Wire Specifications

Auto switch model		D-M9N(V)	D-M9P(V)	D-M9B(V)
Sheath	Outside diameter [mm]	ø2.6		
Insulator	Number of cores	3 cores (Brown/Blue/Black)		2 cores (Brown/Blue)
	Outside diameter [mm]	ø0.88		
Conductor	Effective area [mm²]	0.15		
	Strand diameter [mm]	ø0.05		
Min. bending radius [mm] (Reference values)		17		

∗ Refer to page 1363 for solid state auto switch common specifications.
∗ Refer to page 1363 for lead wire lengths.

Weight

[g]

Auto switch model		D-M9N(V)	D-M9P(V)	D-M9B(V)
Lead wire length	0.5 m (**Nil**)	8		7
	1 m (**M**)	14		13
	3 m (**L**)	41		38
	5 m (**Z**)	68		63

Dimensions

[mm]

D-M9□

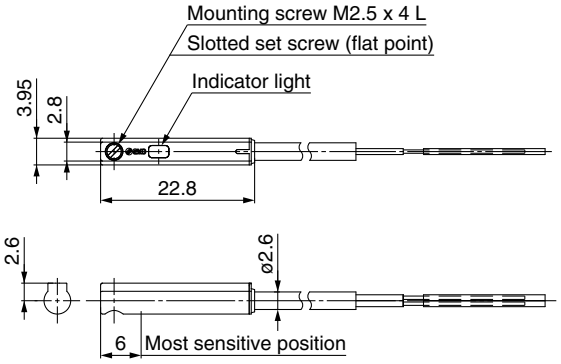

D-M9□V

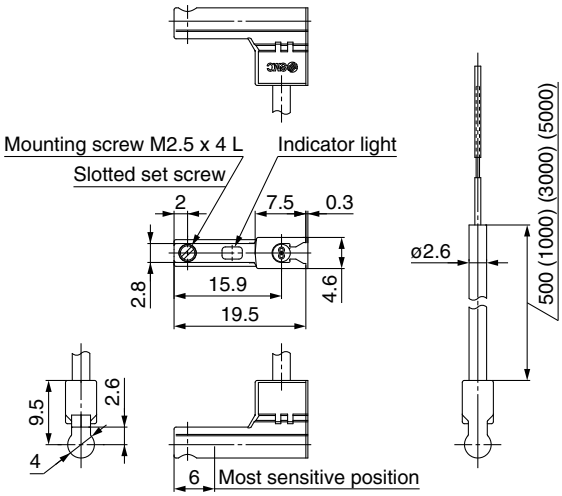

2-Color Indicator Solid State Auto Switch Direct Mounting Type
D-M9NW(V)/D-M9PW(V)/D-M9BW(V)

Refer to the SMC website for details on products that are compliant with international standards.

Grommet

- **2-wire load current is reduced (2.5 to 40 mA).**
- **Using flexible cable as standard spec.**
- **The proper operating range can be determined by the color of the light. (Red → Green ← Red)**

⚠Caution

Precautions

Fix the auto switch with the existing screw installed on the auto switch body. The auto switch may be damaged if a screw other than the one supplied is used.

Auto Switch Specifications

PLC: Programmable Logic Controller

D-M9□W, D-M9□WV (With indicator light)						
Auto switch model	D-M9NW	D-M9NWV	D-M9PW	D-M9PWV	D-M9BW	D-M9BWV
Electrical entry direction	In-line	Perpendicular	In-line	Perpendicular	In-line	Perpendicular
Wiring type	3-wire				2-wire	
Output type	NPN		PNP		—	
Applicable load	IC circuit, Relay, PLC				24 VDC relay, PLC	
Power supply voltage	5, 12, 24 VDC (4.5 to 28 V)				—	
Current consumption	10 mA or less				—	
Load voltage	28 VDC or less		—		24 VDC (10 to 28 VDC)	
Load current	40 mA or less				2.5 to 40 mA	
Internal voltage drop	0.8 V or less at 10 mA (2 V or less at 40 mA)				4 V or less	
Leakage current	100 μA or less at 24 VDC				0.8 mA or less	
Indicator light	Operating range ····· Red LED illuminates. Proper operating range ····· Green LED illuminates.					
Standard	CE/UKCA marking					

Oilproof Flexible Heavy-duty Lead Wire Specifications

Auto switch model		D-M9NW(V)	D-M9PW(V)	D-M9BW(V)
Sheath	Outside diameter [mm]	ø2.6		
Insulator	Number of cores	3 cores (Brown/Blue/Black)		2 cores (Brown/Blue)
	Outside diameter [mm]	ø0.88		
Conductor	Effective area [mm²]	0.15		
	Strand diameter [mm]	ø0.05		
Min. bending radius [mm] (Reference values)		17		

∗ Refer to page 1363 for solid state auto switch common specifications.
∗ Refer to page 1363 for lead wire lengths.

Weight

[g]

Auto switch model		D-M9NW(V)	D-M9PW(V)	D-M9BW(V)
Lead wire length	0.5 m (**Nil**)	8		7
	1 m (**M**)	14		13
	3 m (**L**)	41		38
	5 m (**Z**)	68		63

Dimensions

[mm]

D-M9□W

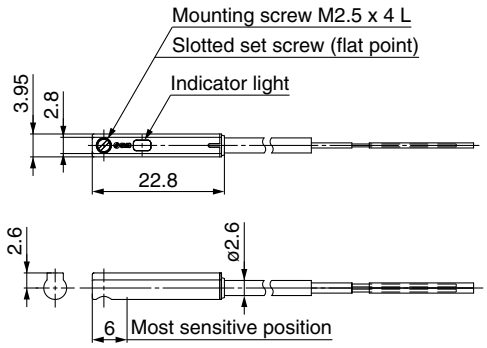

D-M9□WV

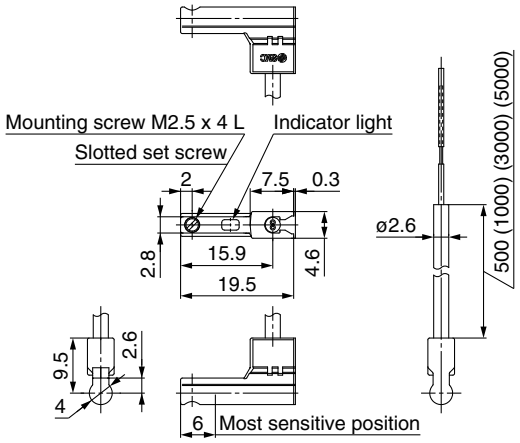

LEM Series
Specific Product Precautions 1

Be sure to read this before handling the products. Refer to page 1351 for safety instructions, pages 1352 to 1357 for electric actuator precautions, and pages 1358 to 1367 for auto switch precautions.

Design

⚠Caution

1. Do not apply a load in excess of the specification limits.
Select a suitable actuator by work load and allowable moment. If a load in excess of the specification limits is applied to the guide, adverse effects such as the generation of play in the guide, reduced accuracy, or reduced service life of the product may occur.

2. Do not increase the speed in excess of the specification limits.
Select a suitable actuator by the relationship between the "speed–work load", and the "work load–acceleration/deceleration". If the product is used outside of the specification limits, adverse effects such as the generation of noise, reduced accuracy, or reduced service life of the product may occur.

3. Do not use the product in applications where excessive external force or impact force is applied to it.
This can cause a malfunction.

4. When external force is to be applied to the table, it is necessary to add the external force to the work load as the total carried load when selecting a size.
When a cable duct or flexible moving tube is attached in parallel to the actuator, it is necessary to add the friction to the work load as the total carried load when selecting a size, too.

5. The resistance value of the attached equipment should be within the allowable external resistance value.

6. When the product repeatedly cycles with partial strokes (see the table below), operate it at a full stroke at least once every few dozen cycles.
Failure to do so may result in the product running out of lubrication.

Model	Partial stroke
LEMB25	45 mm or less
LEMB32	45 mm or less
LEMC25	30 mm or less
LEMC32	40 mm or less
LEMH25	20 mm or less
LEMH32	25 mm or less
LEMHT25	20 mm or less
LEMHT32	25 mm or less

Handling

⚠Caution

1. INP output signal (JXC51/61)
1) Positioning operation
When the product comes within the set range of the step data [In positon], the INP output signal will turn ON.
Initial value: Set to [1] or higher.

2. Never allow the table to collide with the stroke end except during return to origin. (Except when the LECP2 controller is used.)
Internal stopper can be broken.

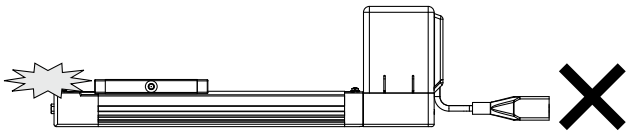

3. The moving force should be the initial value.
If the moving force is set below the initial value, it may cause the generation of an alarm.

4. The actual speed of this actuator is affected by the work load.
Check the model selection section of the catalog.

5. Do not apply a load, impact or resistance in addition to the transferred load during return to origin.
Additional force will cause the displacement of the origin position since it is based on the detected motor torque.

Handling

⚠Caution

6. Do not dent, scratch, or cause other damage to the body or table mounting surfaces.
Doing so may cause unevenness in the mounting surface, play in the guide, or an increase in the sliding resistance.

7. Do not apply strong impact or an excessive moment while mounting a workpiece.
If an external force over the allowable moment is applied, it may cause play in the guide or an increase in the sliding resistance.

8. Provide a flat surface for installing the actuator. The degree of surface flatness should be determined by the machine precision requirement, or its corresponding precision.
The degree of surface flatness for installing the actuator should be within 0.05 mm/200 mm. The degree of surface flatness for mounting a workpiece should be within 0.05 mm (LEMB), 0.02 mm (LEMC/H/HT).

9. When mounting the product, secure a bending diameter of 40 mm or longer for the cable.

10. Do not allow a workpiece to collide with the table during the positioning operation or within the positioning range.

11. When mounting the product, use screws of adequate length and tighten them with adequate torque.
Tightening the screws with a higher torque than recommended may result in a malfunction, while tightening with a lower torque can result in the displacement of the mounting position or, in extreme conditions, the actuator could become detached from its mounting position.

Body fixed

LEMB type

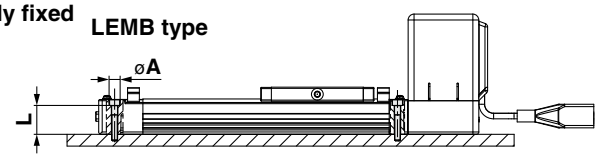

LEMC/H/HT type

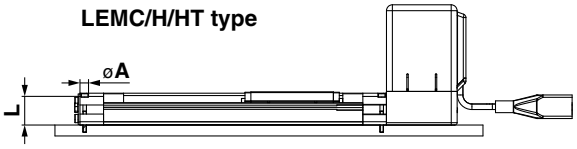

Model	Screw size	Maximum tightening torque [N·m]	øA [mm]	L [mm]
LEMB□	M5	3	5.5	24.5
LEMC25 **LEMH25**	M3	0.6	3.4	23.7
LEMC32 **LEMH32**	M5	3	5.5	30.1
LEMHT25	M5	3	5.5	21.6
LEMHT32	M8	12.5	9	26.9

Workpiece fixed

LEMB type **LEMC/H/HT type**

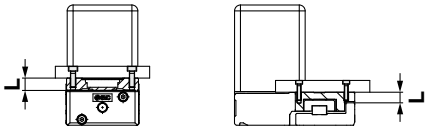

Model	Screw size	Maximum tightening torque [N·m]	L (Maximum screw-in depth)[mm]
LEMB□	M5 x 0.8	3	8
LEMC25 **LEMH25**	M4 x 0.5	1.5	7
LEMC32 **LEMH32**	M5 x 0.8	3	9
LEMHT25	M5 x 0.8	3	9
LEMHT32	M8 x 1.25	12.5	12

To prevent the workpiece retaining screws from touching the body, use screws that are 0.5 mm or shorter than the maximum screw-in depth. If long screws are used, they may touch the body and cause a malfunction.

LEM Series
Specific Product Precautions 2

Be sure to read this before handling the products. Refer to page 1351 for safety instructions, pages 1352 to 1357 for electric actuator precautions, and pages 1358 to 1367 for auto switch precautions.

Handling

⚠Caution

12. Do not operate by fixing the table and moving the actuator body.

13. The belt drive actuator cannot be used for vertical applications.

14. Check the specifications for the minimum speed of each actuator.
Failure to do so may result in unexpected malfunctions such as knocking.

15. In the case of the belt drive actuator, vibration may occur during operation at speeds within the actuator specifications due to the operating conditions. Change the speed setting to a speed that does not cause vibration.

16. High frequency noise will be generated during deceleration depending on the operating conditions. This is a noise generated during processing the regenerative power. It is not a failure.

17. When using an actuator with a longer stroke, implement an intermediate support.
When using an actuator with a longer stroke, implement intermediate support to prevent frame deflection or deflection caused by vibration or external impacts.

18. Attaching and detaching the drive unit
To remove the drive unit, remove the 6 drive unit retaining cap screws and remove the slider from the guide unit. To install the drive unit, insert its slider into the slide table on the guide unit and tighten 2 screws of the connection part, and then equally tighten the 4 retaining cap screws. Tighten the retaining cap screws securely because if they become loose, problems may occur such as damage, malfunction.

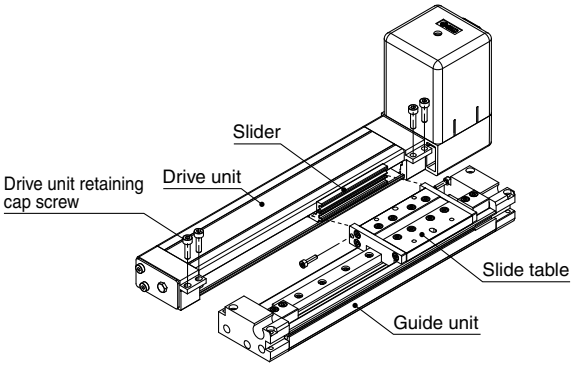

19. Workpiece mounting
When mounting a magnetic workpiece, keep a clearance of 5 mm or greater between the auto switch and the workpiece. Otherwise, the magnetic force within the actuator may be lost, resulting in malfunction of the auto switch.

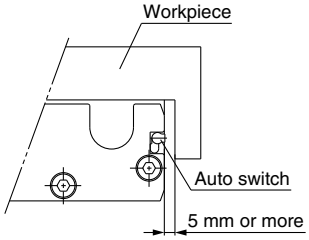

Handling

⚠Caution

20. For the model where grease is applied to the dust seal band for sliding, when wiping off the grease to remove foreign matter, etc., be sure to reapply grease afterward.

21. Do not apply external force to the dust seal band.
Particularly during the transportation

Maintenance

⚠Warning

Maintenance frequency
Perform maintenance according to the table below.

Frequency	Appearance check	Internal check	Belt check
Inspection before daily operation	○	—	—
Inspection every 6 months/1000 km/ 5 million cycles*1	○	○	○

*1 Select whichever comes first.

- **Items for visual appearance check**
  1. Loose set screws, Abnormal amount of dirt, etc.
  2. Check for visible damage, Check of cable joint
  3. Vibration, Noise
- **Items for internal check**
  1. Lubricant condition on moving parts
  2. Loose or mechanical play in fixed parts or fixing screws
- **Items for belt check**
  Stop operation immediately and replace the belt when any of the following occur. In addition, ensure your operating environment and conditions satisfy the requirements specified for the product.

a. Tooth shape canvas is worn out
Canvas fiber becomes fuzzy, Rubber is coming off and the fiber has become whitish, Lines of fibers have become unclear

b. Peeling off or wearing of the side of the belt
Belt corner has become rounded and frayed threads stick out

c. Belt partially cut
Belt is partially cut, Foreign matter caught in the teeth of other parts is causing damage

d. A vertical line on belt teeth is visible
Damage which is made when the belt runs on the flange

e. Rubber back of the belt is softened and sticky.

f. Cracks on the back of the belt are visible